HOME PERSONAL COMPUTER

AX-500

SERVICE MANUAL

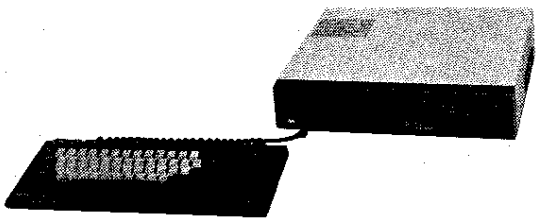

■ CONTENTS

Features 1
Specifications 1
Memory map 3
AX-500 I/O address map 4
Floppy disc system I/O address map 4
Disassembly Procedures 5
Keyboard Unit Disassembly 9
Screw Arrangement Diagram 10
Adjustments 11
Calendar clock adjustment 12
New LSI Data Table 14

008530

SINCE 1887 YAMAHA
NIPPON GAKKI CO., LTD. HAMAMATSU, JAPAN
0.2K-0384 ⊖ Printed in Japan '86.12

FEATURES

- Separate keyboard with 10 keys
- Equipped with 2 1-Mbyte type 3.5 inch double-sided floppy disc drivers.
- 2 cartridge slot, 1 side slot.
- Capable of outputting each picture of RGB, composite video and RF
- Main recording capacity: 256 Kbytes
- Recording capacity for video: 128 Kbytes
- YM-3814 (MSX_2 system) used
  - Bit map function
  - Clock function
  - Back-up RAM (16 bytes)

SPECIFICATIONS

CPU to be used:	Z80A or its equivalent (LH0080A)
Clock frequency:	3.579545 MHz
Wait:	1 wait cycle inserted into M1 cycle
Interrupt:	NMI not used Interrupt from VDP and external slot is used. Normally, MSX-BASIC inter-printer uses 50Hz signal sent out from VDP as an interrupt signal. (Interrupt mode 1)
Reset:	Power ON reset or reset switch is used.

Memory

Main memory:	RAM area (with memory mapper function) 256 Kbytes 64 Kbit × 4 columns × 8 chips ROM area (including each type of application) MSX_2 BASIC Ver 2.1 (INT) 32 Kbytes Exp. BASIC & Disk BASIC 32 Kbytes ARABIC BASIC 32 Kbytes SAKHR FILES 48 Kbytes ARABIC PAINTER 64 Kbytes ARABIC WP 32 Kbytes
Video RAM:	128 Kbytes

Screen Display

VDP to be used:	Video display processor V9938
Characters:	Alphanumeric characters, Arabic characters, graphic characters ..... 256 types 8 × 8 (6 × 8 screen 0) dot Refer to Display mode for resolution, pattern size, color and number of sprites.

Calendar Function and Battery Backup Function

Calendar:	Built in YM3814 (MSX_2 system) Compatible with RP5C01 (made by RICOH) on software Error; within 60 seconds/month Calendar (year, month, day) Time (hour, minute, second)
Back-up:	Calendar clock & RAM (16 bytes) built in YM3814 is backed up when main power is turned OFF.
Battery:	2 AAA type batteries are used (about 1-year service life)

I/O Interface

Separate keyboard:
- 13 pin DIN receptacle connector
- Step sculpture type (Only 10 key is step type.)
  - Alphanumerical characters, special characters and arabic characters 48
  - Control and special keys 16
  - Cursor keys 4
  - Function key (10 functions available by shifting) 5
  - 10 key 16
  - CODE lock and CAPS lock ..... indicated by LED

Audio cassette interface:
- 8 pin DIN receptacle connector
- Baud rate: 1200/2400bps FSK system (changed by software)
- With remote control function

Printer interface:
- Unphenol 14 pin female connector
- Conforming to 8 bit parallel centronics specifications
- TTL level

Generalized input/output (JOYSTICK etc.) 2 port:
- D sub-type 9 pin male connector × 2
- TTL level

A/V output
- Sound output 8 octave triple chord output, special sound, noise RCA pin jack
- 8 octave triple chord section
  - 47kΩ load, 0.40 ± 0.10Vrms MAX
  - (440Hz square wave, 1ch output)
- Special sound section
  - 47kΩ load, 0.20 ± 0.05Vrms MAX
  - (440Hz square ware output)
- PAL composite video output
  - 75Ω RCA pin jack
- RF output
  - UHF 36 channels
  - RCA pin jack
- RGB output
  - Signal corresponding to EIAJ21 pin output
  - 8 pin DIN receptacle connector
- ROM cartridge slot (SLOT A, SLOT B):
  - 50P Female connector of MSX specifications
- Side cartridge slot (SLOT #33):
  - 60P Card edge connector (specially for YAMAHA)

Power section

Power specifications:	Primary side	100V ~ 240V (±10%) 50/60Hz
	Secondary side	5V 3.0A
		+12V 0.5A
		−12V 0.2A
Power external output	5V ± 5%	1A (max)
	slot	300mA × 2
	I/O port	50mA × 2
	Side slot	300mA
	+12V ±10%	100mA (max)
	−12V ±10%	100mA (max)

General specifications

Power:

Power consumption: Max,	21W
Operating conditions: Temperature	5 ~ 35°C
Humidity	20 ~ 80%
Dimensions (Width × height × depth):	
AX-500	395mm × 80mm × 380mm
Keyboard	417mm × 36mm × 175 mm
Curled cord	1500mm ± 50mm
Weight: Main Unit	6.7kg
Keyboard	1.8kg
AC cable:	2000mm ± 50mm

3.5 inch FDD

Number of built-in drivers:
AX-500 Model 2 units

Specifications of drivers to be used:

Product number	JU-363-08 type
Disc to be used	3.5inch double-sided, double-density, double-tracks (2DD type)
Recording capacity	1 Mbyte unformatted (both sides) 720 Kbytes formatted (both sides)
Recording density	8717 BPI
Track density	135 TPI
Number of cylinders	80 cylinder
Number of tracks	160 tracks when both sides are used.
Access time	100ms at average Step rate; 6ms

Specifications of controller:

FDC	MB8877M (Fujitsu)
Data separator	SED9420-CAC (SEIKO) Analog filter changing type VFO

Display Mode

	Resolution	Pattern Size	Color	Sprite Number	V-RAM Area
Text I (SCREEN 0)	256 × 192 (MAX 40 characters)	6 × 8 (256 types)	2 out of 512	No	16K
Text II (SCREEN 0)	512 × 192 (MAX 80 characters)	6 × 8 (256 types)	2 out of 512	No	16K
Multicolor (SCREEN 3)	64 × 48	4 × 4	16 out of 512	4/line out of 32	16K
G I (SCREEN 1)	256 × 192	8 × 8 (256 types)	16 out of 512	4/line out of 32	16K
G II (SCREEN 2)	256 × 192	8 × 8 (768 types)	16 out of 512	4/line out of 32	16K
G III (SCREEN 4)	256 × 192	8 × 8 (768 types)	16 out of 512	8/line out of 32	16K
G IV (SCREEN 5)	256 × 192	Bit Map	16 out of 512	8/line out of 32	32K
G V (SCREEN 6)	512 × 192	Bit Map	4 out of 512	8/line out of 32	32K
G VI (SCREEN 7)	512 × 192	Bit Map	16 out of 512	8/line out of 32	128K (2 screens)
G VII (SCREEN 8)	256 × 192	Bit Map	256 colors simultaneously	8 line out of 32	128K (2 screens)

■ MEMORY MAP

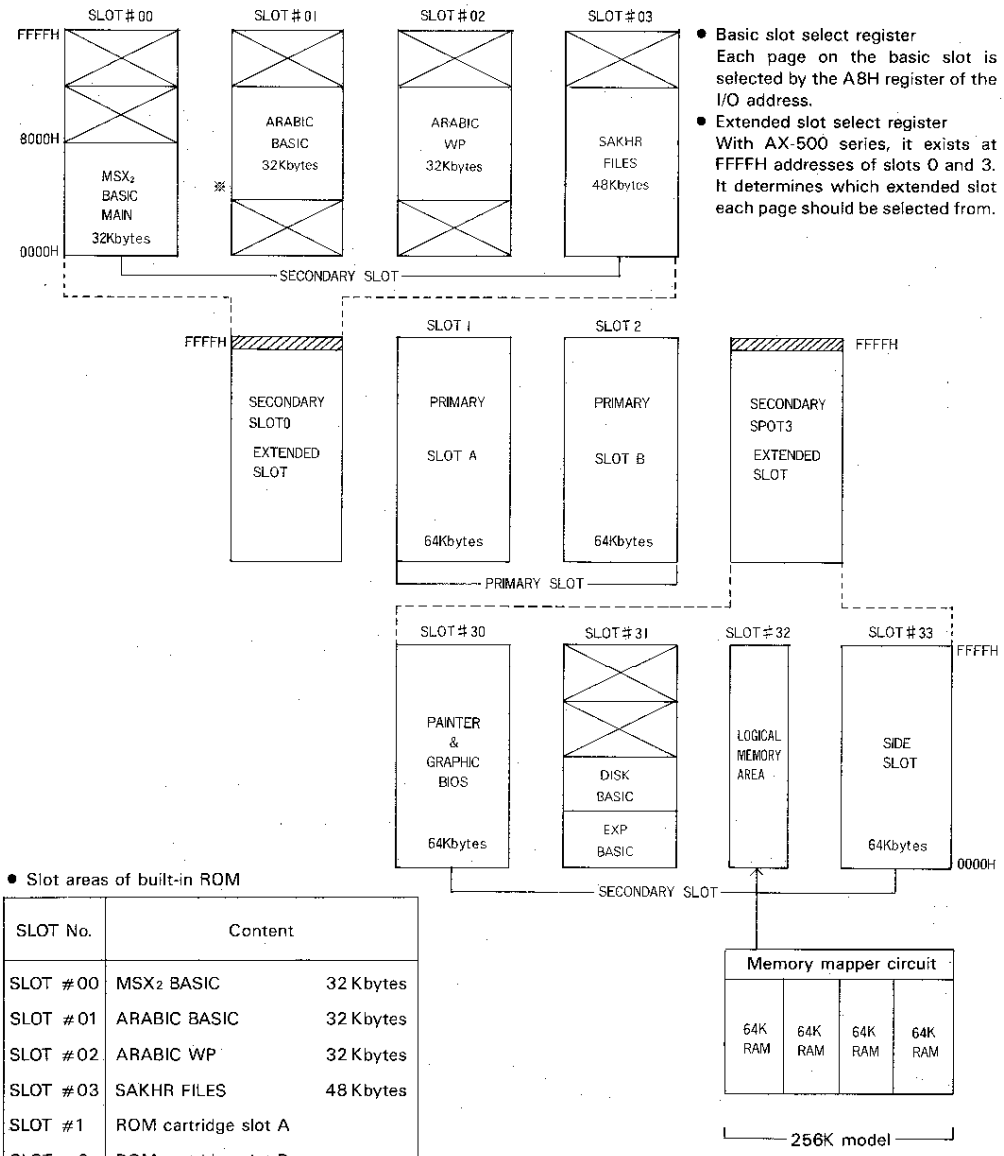

- Basic slot select register
  Each page on the basic slot is selected by the A8H register of the I/O address.
- Extended slot select register
  With AX-500 series, it exists at FFFFH addresses of slots 0 and 3. It determines which extended slot each page should be selected from.

- Slot areas of built-in ROM

SLOT No.	Content	
SLOT #00	MSX2 BASIC	32 Kbytes
SLOT #01	ARABIC BASIC	32 Kbytes
SLOT #02	ARABIC WP	32 Kbytes
SLOT #03	SAKHR FILES	48 Kbytes
SLOT #1	ROM cartridge slot A	
SLOT #2	ROM cartridge slot B	
SLOT #30	ARABIC PAINTER	64 Kbytes
SLOT #31	DISK/EXP BASIC	32 Kbytes
SLOT #32	MAIN RAM	256 Kbytes
SLOT #33	Side cartridge slot	

■ AX-500 I/O ADDRESS MAP

The following table shows the AX-500 I/O map.

FFH FEH FDH FCH	P/W R/W R/W R/W	Map register on p.3 Map register on p.2 Map register on p.1 Map register on p.0	Each block of M0 to M3 is assigned when the power is ON and when resetting.
B5H B4H	R/W W	Calendar clock (Built in MSX_2 system)	Data (READ/WRITE) Address latch (WRITE)
ABH AAH A9H A8H	R/W R/W R R/W	Parallel port (equivalent to μPD8255)	Mode set (bit set, reset) Keyboard strobe, cassette control PP1 sound Keyboard return read Primary slot select register
A2H A1H A0H	R W W	Sound generator, joy port, etc.	Data (READ) Data (WRITE) Internal address latch (WRITE) SSG internal register address set
9BH 9AH 99H 98H	W W R/W R/W	VDP-9938	Internal register indirest assignment (WRITE) Color palette register access (WRITE) Command access to VDP/status read Data to V-RAM READ/WRITE
91H 90H	W R/W	Printer port	Data output (printer) Busy (READ) bit 1 Strobe (WRITE) bit 0
47H 46H	R/W W		Bit pattern (WRITE)/color code (READ) FG, BG color code (WRITE)
42H 41H	R/W W		Back-up RAM (data) READ/WRITE Back-up RAM address latch
40H	R/W		Device ID number register

■ FLOPPY DISK SYSTEM I/O ADDRESS MAP

The I/O address for the floppy disk system is assigned to a part of the memory area of application software by using the memory mapped I/O system.

Floppy disk system I/O address map

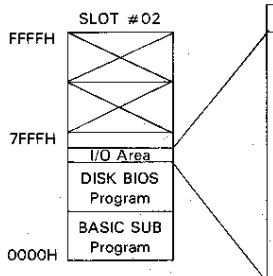

Address	When READ	When WRITE
7FBCH	b7: IRQ b6: DRQ b5 b4 D7 6 5 4 3 2 1 D0 (LSB / MSB) b3 b2 b1 b0	b7 b6 b5 b4 b3: Moter ON/OFF 0: OFF b2: Side Select 0: Side 0 b1: Drive 2 Select 0: mask b0: Drive 1 Select 0: mask
7FBBH	Data register	Data register
7FBAH	Sector register	Sector register
7FB9H	Track register	Track register
7FB8H	FDC status register	FDC command register

7FB8H to 7FBBH are internal registers of FDC (MB8877).

■ DISASSEMBLY PROCEDURES

Top Cover Removal

- Unscrew 4 screws on both sides.
- Unscrew the screw at the upper center of the rear panel.
- Remove the top cover by lifting it up while using care for the groove of the side slot guide.

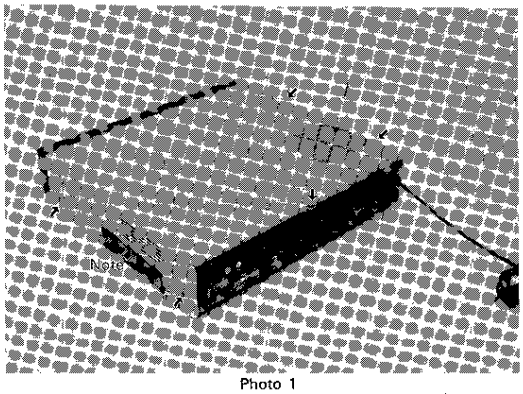

Photo 1

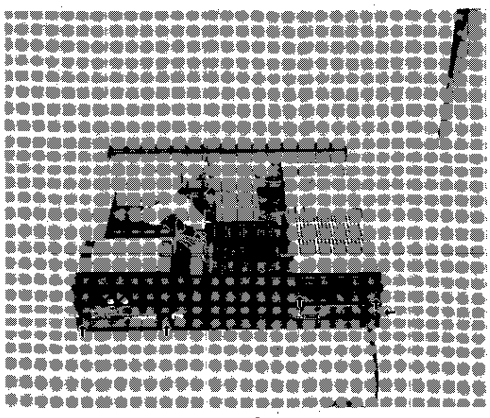

Photo 2

Rear Panel Removal

- Unscrew 5 screws fixing the rear panel.
- Remove the rear panel by opening it from the lower side while sliding it upward a little.

AC Inlet Ass'y Removal

- Unscrew 2 screws fixing the AC inlet ass'y. (Photo. 3-A)
- Disconnect 2 power lines from the AC inlet ass'y. Connector for front panel ass'y (Photo. 3-C) Connector for CPU main circuit board (CN304) (Photo. 3-D)
- Remove the AC inlet ass'y by lifting it up.

Note) The power unit (power circuit board) is installed in the AC inlet ass'y.

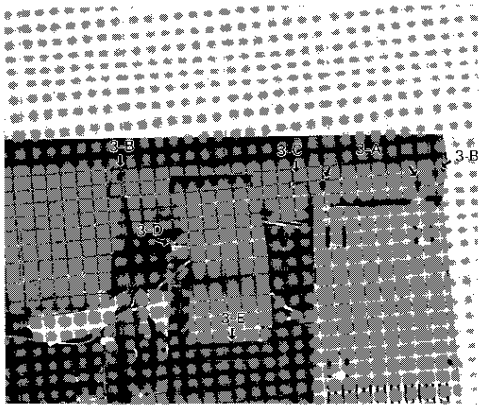

Photo 3

Front Panel Ass'y Removal

- Unscrew 2 screws in the apper part of the front panel ass'y (Photo. 3-B)
- Disconnect the flat cable (CN308) to the CPU main circuit board. (Photo. 3-E)
- Remove 4 plastic stoppers of the front panel ass'y from the bottom of the main unit by pushing them with a screwdriver. (Photo. 4)
  * With the YIS805/128 model, if a floppy disk driver

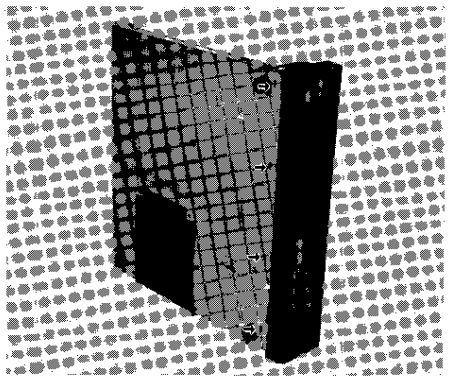

Photo 4

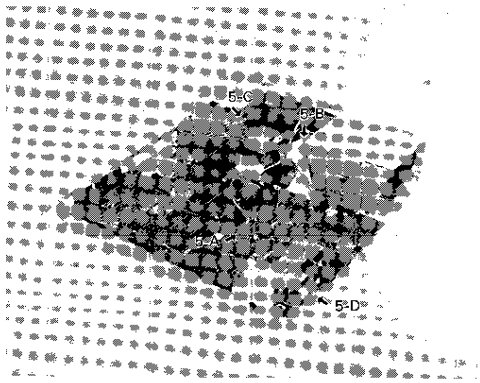

Photo 5

CPU Main Circuit Board Removal

- Pull off the battery cable ass'y (CN309). (Photo. 5-A)
- Pull off the power line to the floppy disk driver and 34P flat cable from the connector on the floppy disk driver. (Photo. 5-B)
  Disconnect the connector of the video circuit board. (Photo. 5-C)
- Unscrew 6 screws fixing the CPU main circuit board and 2 screws of the side slot ground. (Refer to the screw list.)
  Remove 2 PC supports (Black) in the center of the CPU main circuit board.
  Remove the keyboard connector from the bottom chassis by loosening 2 screws. (Photo. 5-D)

Video Encloder Circuit Board Removal

- Pull off the harness (CN201) from the CPU main circuit board. (Photo. 6-A)
- Unscrew 4 screws.
- Remove the video encoder circuit board by pulling it rearward.

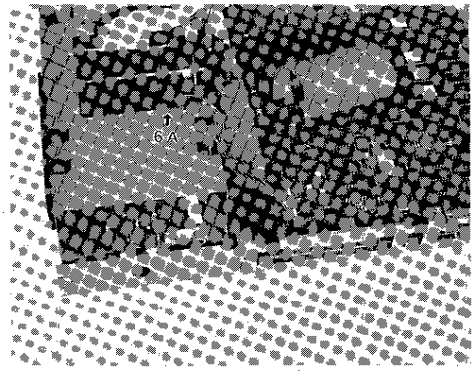

Photo 6

FDD Floppy Disk Driver Removal

- Unscrew 2 screws fixing the FDD shielding ass'y.
- Pull out the connector to the FDD (with 34 pin flat cable and power cable).
- Unscrew 4 screws fixing the video encoder circuit board. (Photo. 6)
- Remove the FDD shielding ass'y with 2 floppy disk drivers mounted as they are.

  Note: As the FDD shielding ass'y is held by catches of the main body chassis, slide it forward for its removal.

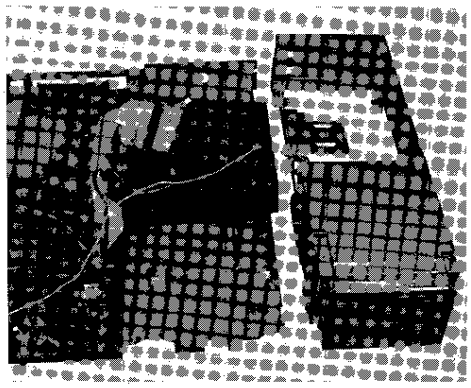

Photo 7

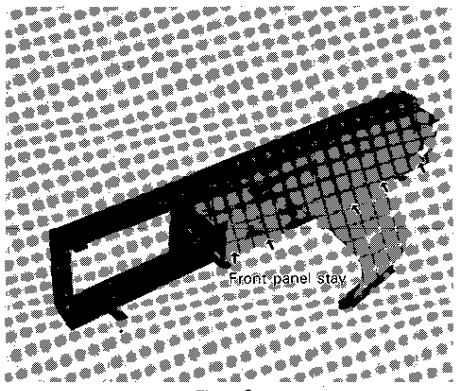

Photo 8

Front Panel Ass'y Disassembly

- Unscrew 4 screws (3 × 16) fixing the front panel stay.
- Remove the stay by sliding it rearward gradually while using care for the 60 pin flat cable.

- Pull off the connector of the micro switch ass'y from the slot circuit board. (Photo. 9-A)
- Unscrew 2 screws (3 × 8) fixing the cartridge case and remove the cartridge case ass'y from the front panel. (Photo. 9-B)

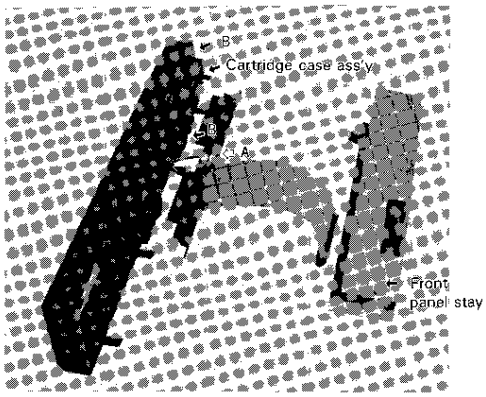

Photo 9

* Note that a fine ground wire is connected on the back of the 60 pin flat cable. Be careful not to move the cable with force in removal, for it may break the fine ground wire.

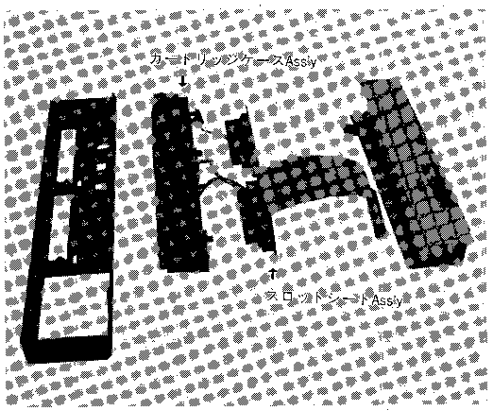

Photo 10

■ KEYBOARD UNIT DISASSEMBLY

Keyboard Circuit Board Removal

(1) Unsolder A and B in Fig. 1.
(2) Straighten the catches numbered from 1 to 6 in the figure.
(3) Remove the flexible circuit board from the connectors C and D as shown in Fig. 2.
(4) Remove the keyboard circuit board gradually.

Keyboard Contact Point Removal

(1) Unscrew 13 special screws shown in Fig. 1, and the contact point of the keyboard can be removed.

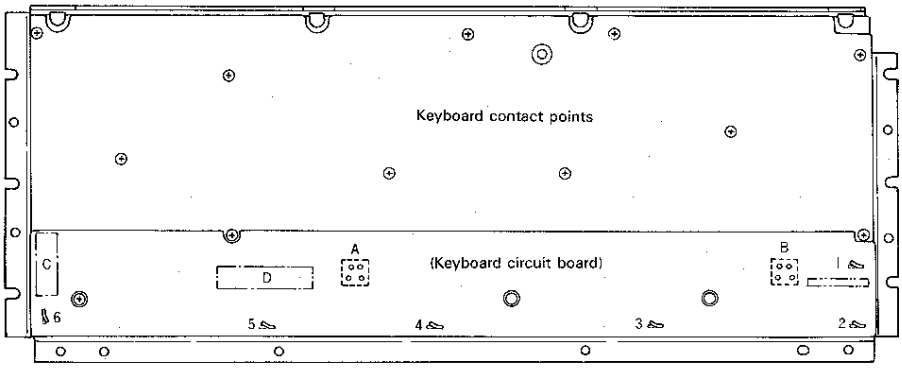

図 1

Fig. 1

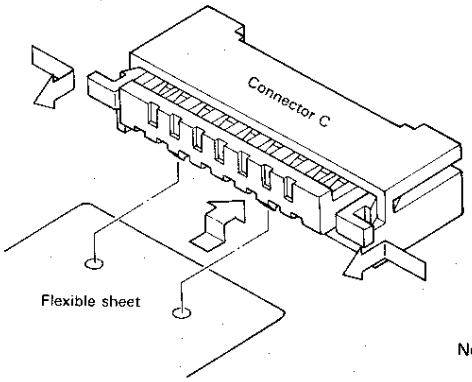

Note: Insert the flexible sheet while fitting the catches of the connector into the holes in the flexible sheet.

Fig. 2

■ SCREW ARRANGEMENT DIAGRAM

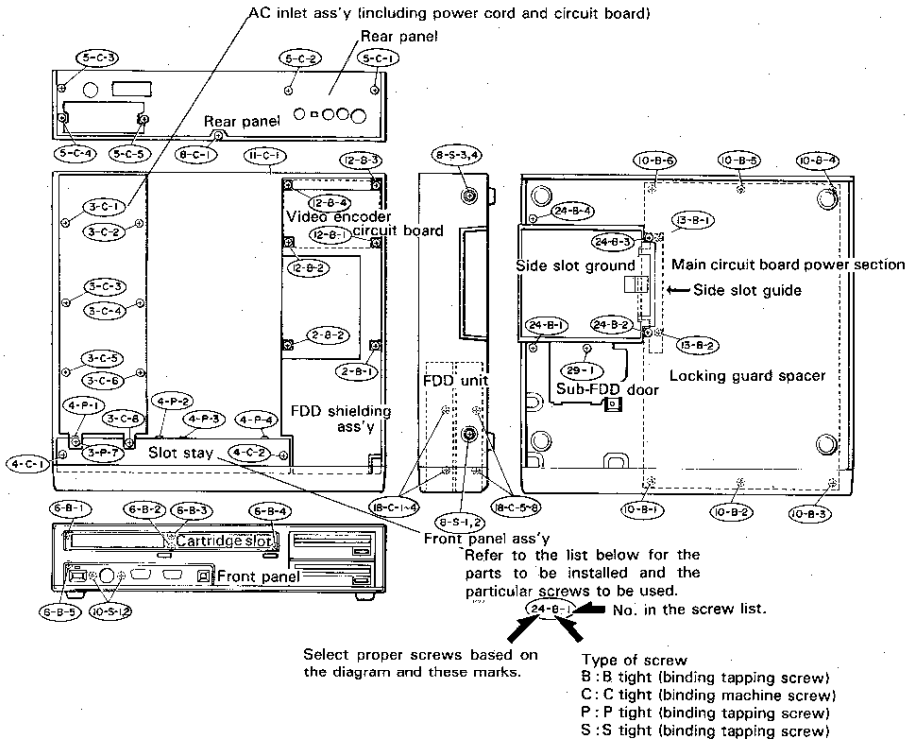

Screw List

Part to be installed		Type of screw and quantity					
No.	Part name	+ binding B tight 3×8	+ binding C tight 3×6	+ binding P tight 3×14	Cup S tight	Coin slotted pan head	Total (pcs.)
24	Side slot guide (to bottom)	4					4
10	Main circuit board (to bottom)	6			2 (to K8 connector)		8
13	Side slot ground	2					2
2	FDD shielding ass'y (to bottom)	2					2
12	Video circuit board (to FDD shielding ass'y)	4					4
18	FDD unit (for 2 units)		8				8
6	Front panel (cartridge slot LED)	5					5
4	Slot stay and circuit board (to front panel)		2 (to bottom)	4			6
3	Power supply unit (to shielding)		8				8
5	Rear panel		5				5
8	Top cover		1 (to rear panel)		4		5
29	Sub-FDD door	1				(1)	1
	Total (pcs.)	24	24	4	6	(1)	58

■ ADJUSTMENTS

< Voltage Adjustment >

Item	For
Conditions	Connect power circuit to CPU board. No load applied to each slot (such as game cartridge) of CPU board. No peripheral equipments (such as printer and joy stick) should not be connected.
Voltage adjustment	+5.10V±5% Connector CN304 (2 pin) and GND
Voltage Confirmation	−12V Connector CN304 (4 pin) and GND: −12V±10.0% +12V Connector CN304 (1 pin) and GND: +12V±10.0%

- With each unit connected, adjust VR101 in the power supply unit so that the output voltage is obtained at the voltage input terminal of the CPU circuit board CN304 as described in the above table.

< Adjustment and Confirmation of Calendar Clock and Back-up Circuit >

Calendar clock adjustment

Write "0011B" into the test register of the calendar clock, set to TEST 3 mode and adjust TC301 on CPU circuit board so that the frequency of the output signal at ALARM terminal of YM3814 (S-1985) 87 pin satisfies the following specification. (Refer to p.12 for the calendar clock adjustment.)

Item	For
Calendar clock	YM3814 (S-1985) 87 pin 8.192 [KHz]±0.2 [Hz]

Confirmation of battery back-up operation

Using BASIC command or MSX-DOS command, put time/ year, month and day in memory.

Turn OFF the power once and ON again, then check to make sure that the time/year, month and day is maintained correctly.

Confirmation of battery back-up circuit terminal voltage

Check to make sure that the voltage at 86 pin BVSS terminal of YM3814 (S-1985) satisfies specifications given below.

Power	Value
When ON	0~0.7V

Power	Value
When OFF	−2.2V or less

< **Adjustment and confirmation of picture circuit** >
Check or adjust for the following at the connecting point A/V connector (CN312) on CPU circuit board.

Pin No.	Name	Item
1	AUDIO	Confirm sound output.
2	VIDEO	Connect video unit and confirm composite video signal.
3	GND	
4	SC	Adjust with TC302 for; CPU CLOCK TTL level f = 3.57945 [MHz] ± 500 [Hz].
5	NC	NON CONNECT
6	SYNC	Negative polarity, period signal output TTL level
7	GND	
8	B	Confirm that voltage is between 0.85V and 1.10V when screen display is white.
9	G	
10	R	

■ CALENDAR CLOCK ADJUSTMENT

1. Preparation for adjustment
Connect a 100K to 150K pull-up resistor between the TEST point and +5V (IC305, 9 pin: LS368) of the CPU circuit board as shown in Fig. 1.

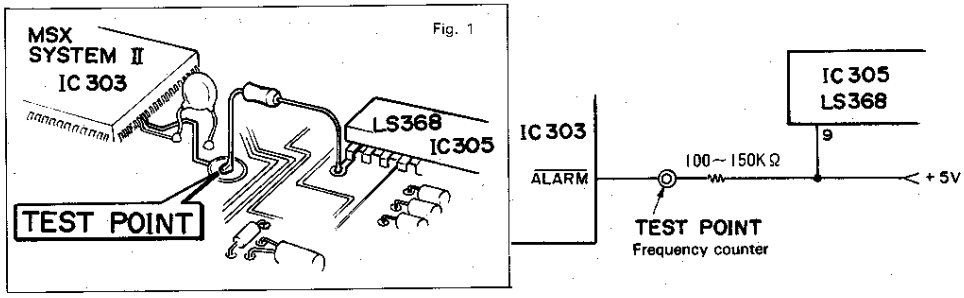

With the CPU circuit board in operating state, prepare BASIC programs as follows.

```
10 OUT & HB4, & HE
20 OUT & HB5, & H3
30 END
```

2. Measurement and adjustment
With a frequency counter connected to the TEST point, run the program and adjust TC301 (variable trimmer) so that f=8.192KHz± 0.2Hz is satisfied.

● **SED9420COB (DATA SEPARATER)**

Pin No.	Pin Name	Function
1	OSC1	Inverting amplifier gate input in crystal oscillation circuit
2	OSC2	Inverting amplifier drain output in crystal oscillation circuit
3	CLK1	Clock input for FDC Standard floppy (8 inch): 8MHz Mini floppy (5 inch): 4MHz
4	TEST2	TEST terminal (input terminal with pull-up resistor)
7	RD DATA	Input terminal (with pull-up resistor) of read data signal from floppy disk driver unit (FDD)
8	WINDOW	Output terminal of data window signal for separating DATA signal into clock pulse and data pulse.
9	DATA	Output terminal for data signal produced from RD data signal. It is separated into data pulse and clock pulse by window signal which is read to FDC.
10	MFM/FM	Terminal for changing recording system between single density and double density (with pull-up resistor) · Double density (MFM recording): High level · Single density (FM recording): Low level
11	MIN/STD	Terminal for changing floppy disk type between mini type (5 inch) and standard type (8 inch) · 5 inch floppy disk: High level · 8 inch floppy disk: Low level
12	Vss1	Ground terminal (digital system)
13	Vss2	Ground terminal (analog system)
14	CONTROL	For control of VCO (Voltage Controlled Oscilator) Input terminal for voltage (output voltage of loop filter)
15	OFFSET	Input terminal of offset voltage for correcting oscillation center frequency of VCO. Offset voltage can be also generated automatically by externally attaching capacity.
17	LPF	Connecting terminal of loop filter (output terminal of charge pump)
18	TEST1	Test terminal (not connected usually)
19	WCLK	Write clock for FDC · STD (8 inch)/MFM : T = 1μsc · STD/FM : T = 2μsc · MIN/MFM : T = 2μsc · MIN/FM : T = 4μsc
20	CR	C-R externally attached terminal for timer circuit
21	CLK2	MB8877 system, clock output terminal for FDC · 8 inch floppy : 2MHz · 5 inch floppy : 1MHz
22	TRIG IN	Trigger input terminal for timer circuit (with pull-up resistor)
23	TM OUT	Timer circuit output terminal
24	V_{DD}	+5V power voltage terminal

Note) The input terminal with pull-up.resistor is pulled up by a resistor whose standard value is 100kΩ. As noise tends to affect easily when used open, it is recommended to connect directly to V_{DD} if the input terminal is used High level.

■ NEW LSI DATA TABLE

• **MB-8877 (FDC)**

Pin No.	Pin Name	I/O	Function
1			
2	$\overline{WE}$	I	Write request signal to internal register
3	$\overline{CS}$	I	FDC chip select signal
4	$\overline{RE}$	I	Read request signal to internal register
5	A0	I	Address line to select internal register
6	A1	I	Address line to select internal register
7	DAL0	I/O	Data line
8	DAL1	I/O	
9	DAL2	I/O	
10	DAL3	I/O	
11	DAL4	I/O	
12	DAL5	I/O	
13	DAL6	I/O	
14	DAL7	I/O	
15	STEP	O	Head movement pulse to FDD
16	DIRC	O	Head movement direction select signal to FDD
17	EARLY	O	Shift write data to the faster side
18	LATE	O	Shift write data to the later side — Compensation terminal
19	$\overline{MR}$	I	FDC chip reset signal
20	Vss	—	Ground
21	V_{DD}	—	+5V power supply
22	$\overline{TEST}$		Pulled up
23	HLT		Pulled up
24	CLK	I	Clock pulse input
25	RG		Read gate
26	RCLK	I	Read data window pulse
27	$\overline{RAW\ READ}$	I	The raw data directly obtained from the disk
28	HLD	O	Press the head on the diskette
29	TG43	O	Head occurata larger track than 44
30	WG	O	Data is being written on the disk
31	WD	O	Write data for the diskette
32	READY	—	Pulled up
33	WF/VF	—	Write data error generated in diskette
34	$\overline{TR00}$	I	Head occure on track 00
35	$\overline{IP}$	I	Index hole detection
36	$\overline{WPRT}$	I	Diskette write disable
37	$\overline{DDEN}$	I	Access a double density diskette
38	DRQ	O	Data request IRQ signal
39	IRQ	O	IRQ signal
40	V_{BB}	—	+12V power supply

• YM-3814 (MSX2-SYSTEM)

Pin No.	Pin Name	I/O	Function
1	AVss	—	Analogue ground
2	PPISND	O	Software controlled sound signal
3	KBDIP	O	Keyboard bus buffer direction signal
4	MA17	O	Address line for memory mapper circuit (256KB)
5	MA16	O	Address line for memory mapper circuit (128KB)
6	MA15	O	Address line for memory mapper circuit (64KB)
7	MA14	O	Address line for memory mapper circuit (32KB)
8	$\overline{\text{VDPCW}}$	O	VDP write enable signal & chip select
9	$\overline{\text{VDPCR}}$	O	VDP read enable signal & chip select
10	AB15	I	Address line from Z80A CPU for page select etc.
11	AB14	I	Address line from Z80A CPU for page select etc.
12	AB7	I	Address line from Z80A CPU for I/O area select etc.
13	AB6	I	
14	AB5	I	
15	AB4	I	
16	AB3	I	
17	AB2	I	
18	AB1	I	
19	AB0	I	
20	DB7	I/O	Data Bus for Z80A CPU
21	DB6	I/O	
22	DB5	I/O	
23	DB4	I/O	
24	DB3	I/O	
25	DB2	I/O	
26	DB1	I/O	
27	DB0	I/O	
28	$\overline{\text{RSEL}}$	I	Secondary slot register select signal input
29	$\overline{\text{KANJI}}$	O	KANJI ROM Select signal
30	ϕIN	I	CPU clock signal 3.579545MHz
31	DVss	—	Digital ground
32	$\overline{\text{M1}}$	I	Instruction fetch signal from Z80A CPU
33	$\overline{\text{RFSH}}$	I	Refresh signal from Z80A CPU
34	$\overline{\text{MREQ}}$	I	Memory request signal from Z80A CPU
35	$\overline{\text{IORQ}}$	I	I/O port request signal from Z80A CPU
36	$\overline{\text{RD}}$	I	Read request signal from Z80A CPU
37	$\overline{\text{WR}}$	I	Write request signal from Z80A CPU
38	$\overline{\text{WAIT}}$	O	Wait timing signal to Z80A CPU
39	$\overline{\text{RAS}}$	O	RAS signal to D-RAM
40	V_{DD}	—	+5V power supply
41	MPX	O	Multiplex signal for D-RAM address bus
42	$\overline{\text{CAS}}$	O	CAS signal to D-RAM
43	$\overline{\text{WE}}$	O	WRITE enable signal for D-RAM
44	$\overline{\text{CS1}}$	O	ROM chip select signal (4000H ~ 7FFFH)
45	$\overline{\text{CS2}}$	O	ROM chip select signal (8000H ~ BFFFH)
46	$\overline{\text{CS12}}$	O	ROM chip select signal (4000H ~ BFFFH)
47	$\overline{\text{SLT00}}$	O	Secondary SLOT 00 select signal
48	$\overline{\text{SLT01}}$	O	Secondary SLOT 01 select signal
49	$\overline{\text{SLT02}}$	O	Secondary SLOT 02 select signal
50	$\overline{\text{SLT03}}$	O	Secondary SLOT 03 select signal

Pin No.	Pin Name	I/O	Function
51	$\overline{SLT1}$	O	Primary SLOT1 select signal
52	$\overline{SLT2}$	O	Primary SLOT2 select signal
53	$\overline{SLT30}$	O	Secondary SLOT30 select signal
54	$\overline{SLT31}$	O	Secondary SLOT31 select signal
55	$\overline{SLT32}$	O	Secondary SLOT32 select signal
56	$\overline{SLT33}$	O	Secondary SLOT33 select signal
57	FWD1	I	Joystick poart 1 signal
58	BACK1	I	
59	LEFT1	I	
60	RIGHT1	I	
61	TRGA1	I/O	
62	TRGB1	I/O	
63	STB1	O	
64	FWD2	I	Joystick poart 2 signal
65	BACK2	I	
66	LEFT2	I	
67	RIGHT2	I	
68	TRGA2	I/O	
69	TRGB2	I/O	
70	STB2	O	
71	$\overline{CAPS}$	O	CAPS LED ON/OFF signal
72	$\overline{KANA}$	O	KANA LED ON/OFF signal
73	$\overline{X0}$	I	Keyboard return signal
74	$\overline{X1}$	I	
75	$\overline{X2}$	I	
76	$\overline{X3}$	I	
77	$\overline{X4}$	I	
78	$\overline{X5}$	I	
79	$\overline{X6}$	I	
80	$\overline{X7}$	I	
81	YA	O	Keyboard scanning signal
82	YB	O	
83	YC	O	
84	YD	O	
85	RESET	I	Reset control signal (“H” enable)
86	BVss	—	Buck up battery for timer (& for memory)
87	$\overline{ALM}$	O	Alarm signal from timer
88	Xout	O	Timer clock signal to quarty circuit
89	Xin	I	Timer clock signal from quarty circuit
90	V_{DD}	—	+5V power supply
91	PDIR	O	Printer data bus direction control signal
92	$\overline{PRD}$	O	Printer port read request signal
93	PWR	O	Printer port write request signal
94	$\overline{PSTB}$	O	Printer STROBE signal
95	PBUSY	I	Printer BUSY signal
96	CMI	I	CMT read signal (data signal)
97	CMO	O	CMT write signal (write data)
98	REM	O	CMT motor ON/OFF control signal
99	SSGSNDL	O	SSG Left sound signal
100	SSGSNDR	O	SSG Right sound signal

■ LSI Pin Configuration

Z–80A (CPU)

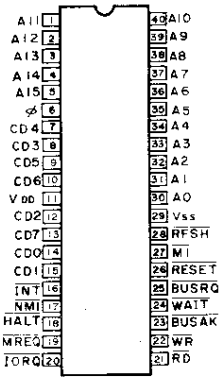

S1985 (MPS2)

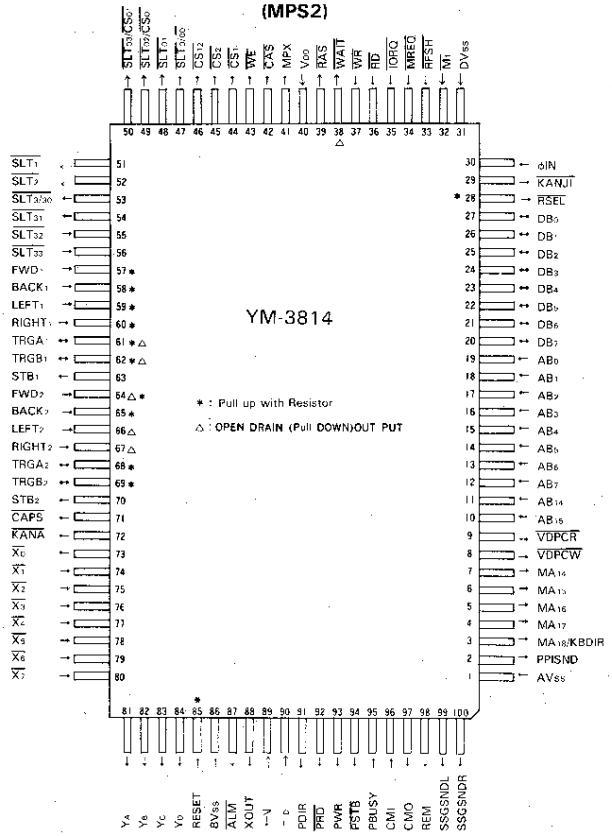

V9938 (VDP)

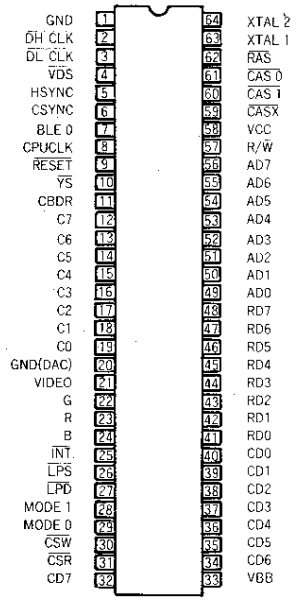

27128 (ROM-128K bits)

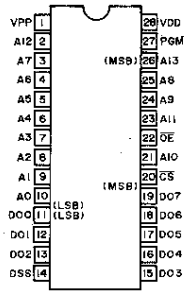

27256 (ROM-256K bits)

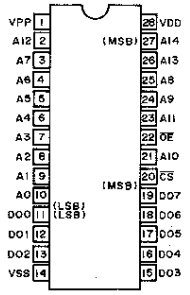

MB8877M
(FDC)

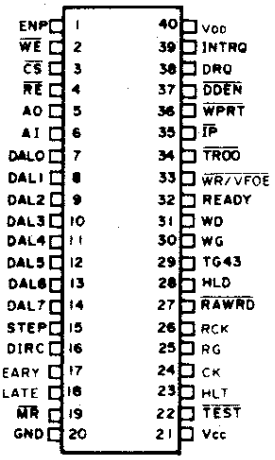

SED9420C
(DATA SEPARATOR)

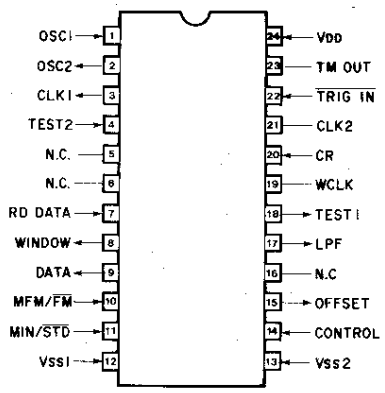

BLOCK DIAGRAM

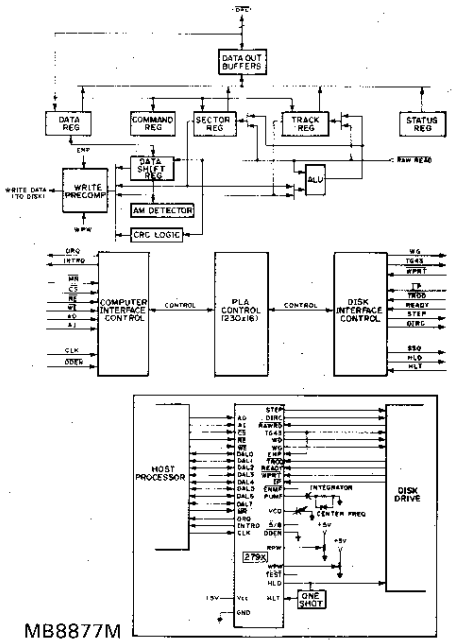

MB8877M

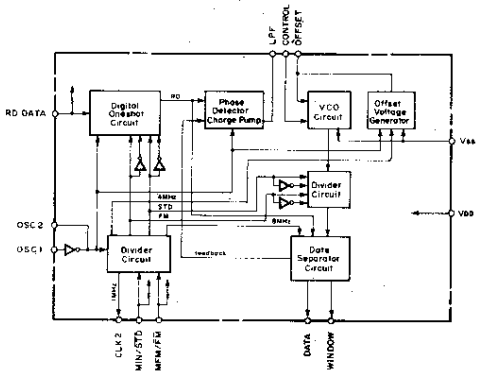

SED9420C

• 7404
Hex Inverter

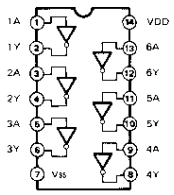

• 7406

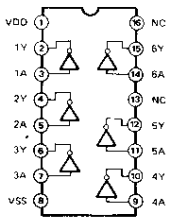

• 7408
Quad 2 Input AND

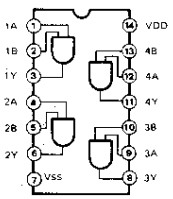

• 7411
Triple 3 Input AND

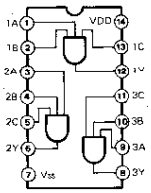

• 7414
Hex Inverter

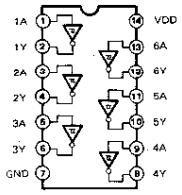

• 7430
8 Input NAND

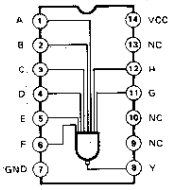

• 7432
Quad 2 Input OR

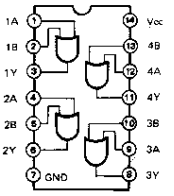

• 74138
3 to 8 Demultiplexer

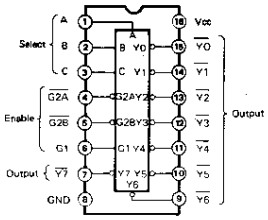

• 74139
Dual 2 to 4 Demultiplexer

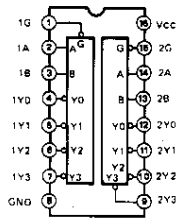

• 74175
Quad D-Type Flip-Flop

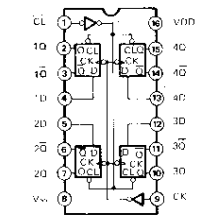

• 74244
Octal 3-State Bus Buffer

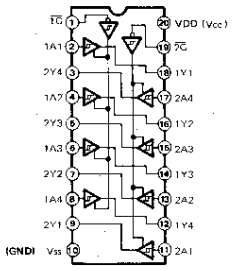

• 74245
Octal 3-State Bus Transceiver

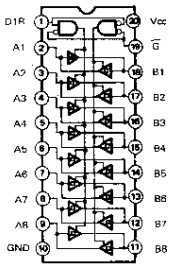

• 74367
Hex 3-State Bus Buffer

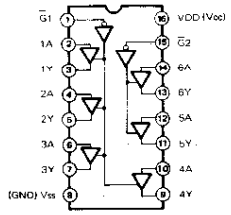

• 74368
Hex 3-State Bus Inverter

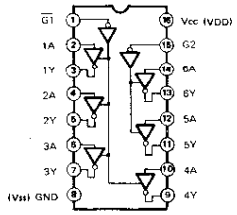

• 74373
Octal 3-State D-Type Latch

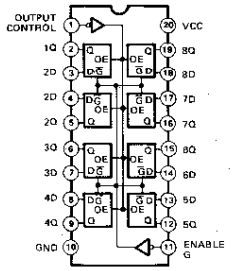

• HC157
Quand 2 to 1 Multiplexer

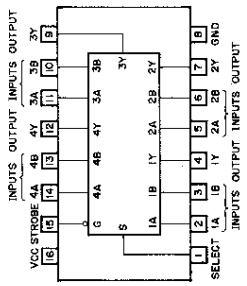

• 74LS670

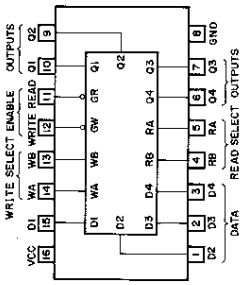

• 74LS00

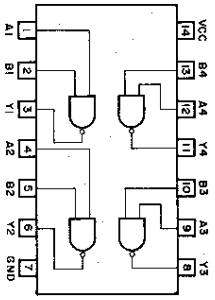

• **MB81464**
(D-RAM 64K x 4 bits)

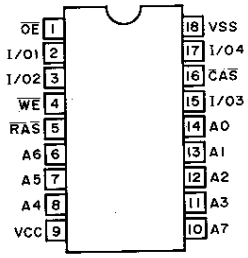

HOME PERSONAL COMPUTER

AX-500

PARTS LIST

■EXTERNAL COMPONENTS

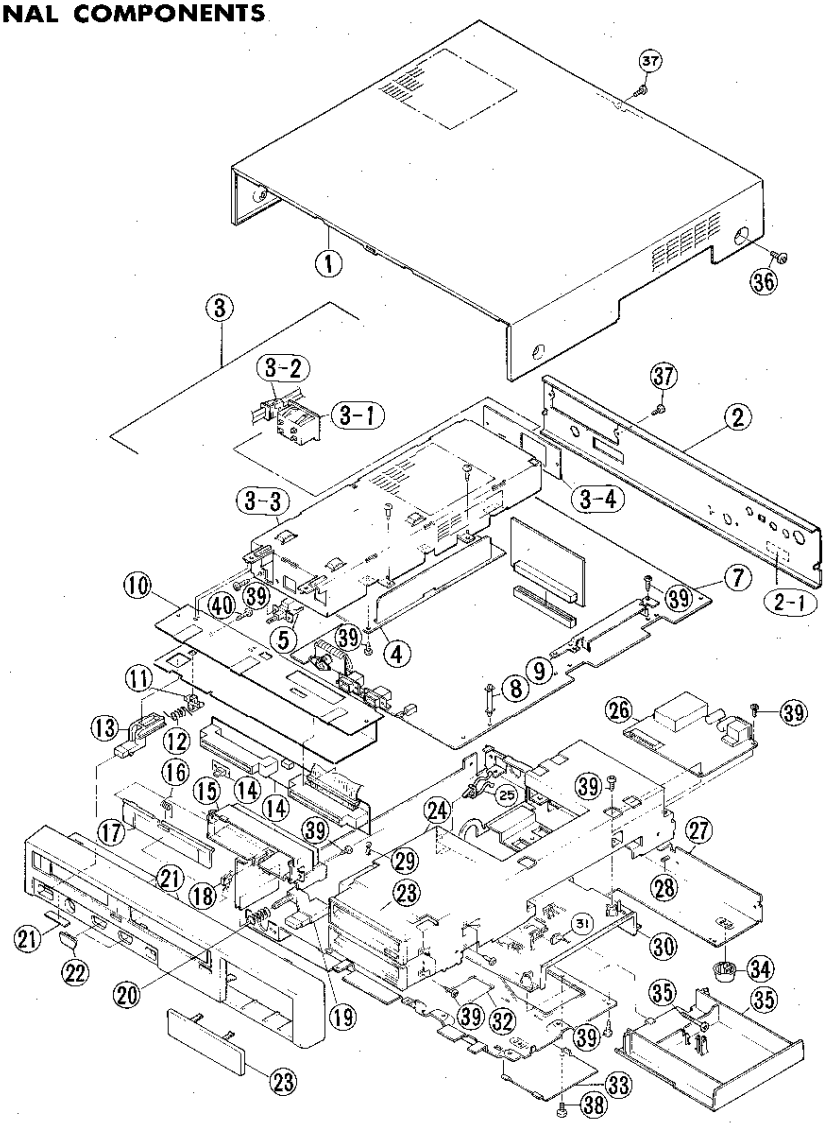

	Ref. No.	Part No.	Description	品名	Remarks	ランク
※	1	VB 75 73 00	Top Cover	トップカバー		
※	2	VB 65 59 00	Rear Panel	リアパネル		
※	2-1	VB 34 77 00	Label	SER.NO. ラベル		
※	3	VB 65 07 00	AC Inlet Assembly	ACインレットAss'y		
	3-1	VB 93 46 00	AC Outlet	電源コネクタ		

※ : New Parts (NR)

ランク: Japan only

	Ref. No.	Part No.	Description		品名	Remarks	ランク
	3-2	MX 55 03 10	AC Cable		電源ケーブル		
	3-3	VB 65 13 00	PW Upper Shield		PWアッパーシールド		
	3-4	VB 65 14 00	PW Panel		PWパネル		
※	4	VB 65 75 00	Power Supply Unit		電源ユニット		
	5	VB 47 50 00	Power Switch		パワースイッチ		
※	6	VB 84 79 00	Circuit Board	ROM Board	ROMシート		
※	7	VB 64 59 00	Circuit Board	CPU	CPUシート		
	8	VB 34 68 00	PC Saport		PCサポート		
	9	AA 55 40 20	Side Slot Earth		サイドスロットアース		
※	10	VB 33 05 00	Slot Stay		フロントスロットステー		
	11	VB 75 79 00	Rod Holder		ロッドホルダー		
※	12	VB 75 76 00	Switch Spring		スイッチスプリング		
	13	VB 32 97 00	Switch Button		スイッチボタン		
※	14	VB 22 59 00	Circuit Board	SLOT	SLOTシート		
※	15	VB 32 93 00	Cartridge Slot		カートリッジスロット		
※	16	VB 33 07 00	Slot Door Spring		スロットドアスプリング		
※	17	VB 32 94 00	Upper Slot Door		アッパースロットドア		
※	18	VB 34 76 00	Micro Switch Assembly		マイクロSW Ass'y		
	18	VA 04 10 00	Micro Switch	SCL101U	マイクロスイッチ		
	18	LB 10 11 30	Terminal for Micro Switch		圧着端子		
	18	LB 00 90 30	Connector Housing	3P	コネクタハウジング		
※	19	VB 32 96 00	Cartridge Slot Eject		カートリッジスロットエジェクト		
※	20	VB 34 63 00	Eject Spring		エジェクトスプリング		
※	21	VB 65 65 00	Front Panel		フロントパネル		
	22	CB 55 40 10	JOYSTICK Cover		ジョイスチックカバー		
	23	VB 07 24 00	FDD Unit		FDDユニット		
※	24	VB 33 04 00	FDD Shield		FDDシールド		
	25	VB 75 78 00	Cable Clip		ケーブルクリップ		
※	26	VB 65 77 00	Circuit Board	Video	ビデオシート		
※	27	VB 33 01 00	Bottom Chassis		ボトムシャーシ		
※	28	AA 62 73 10	GND Terminal		GNDターミナル		
	29	CB 83 19 80	Spacer	KGLS-10R	ロッキングカードスペーサ		
※	30	VB 32 98 00	Side Slot Guide		サイドスロットガイド		
	31	LB 10 11 30	Terminal		圧着端子		
	31	LB 00 90 30	Connector Housing	3P	コネクタハウジング		
	31	BB 55 00 60	Terminal (+)	MSX2	バッテリー端子(+)		
	31	BB 55 00 70	〃 (−)	MSX2	〃 (−)		
	31	NB 55 27 90	Battery Cable Assembly		バッテリーケーブルAss'y		
※	32	VB 33 00 00	Battery Lock		バッテリーロック		
	33	VB 33 06 00	FDD Door		FDDドア		
	34	VB 34 59 00	Leg		トランレッグ		
※	35	VB 65 70 00	Side Slot Cover Assembly		サイドスロットカバーAss'y		
	35	EX 55 00 10	Bind Head Screw	3.0×30	コインスリワリツキネジ		
	36	EK 36 50 20	BW Bind Head Screw	4.0X6 FCM3BL	BWヘッドネジ		
	37	ED 33 00 66	Bind Head Screw	3.0X6 FCM3BL	バインドCタイト		
	38	VB 34 65 00	Pan Head Boning Screw	3.0×6 FCRM3BL	コインナベ+Cタイト		
	39	Ei 33 00 86	Bind Head Tapping Screw	3.0X8 FCM3BL	バインドタッピングネジ		
	40	Ei 33 01 46	〃	3.0X14 ZMC2BL	〃		

※ : New Parts (NR)

ランク: Japan only

■KEYBOARD COMPONENTS

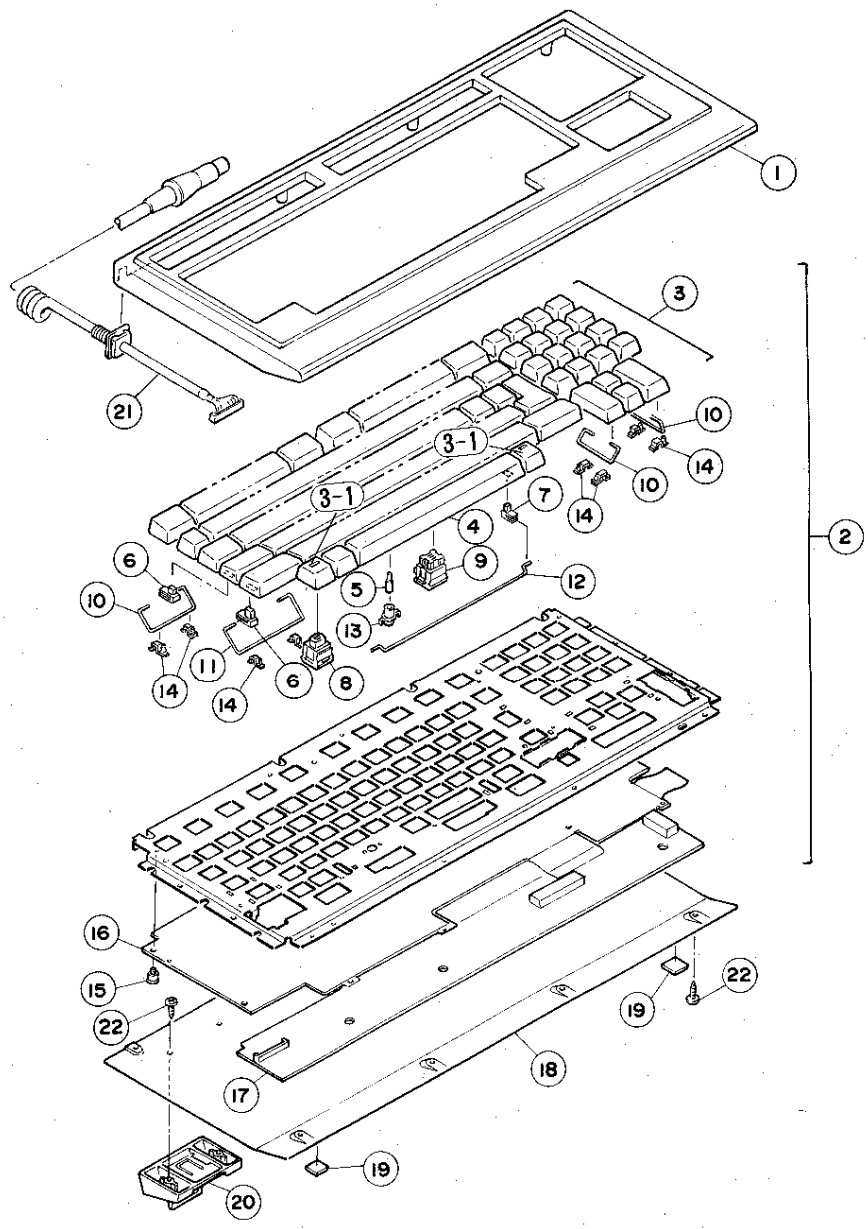

	Ref. No.	Part No.	Description		品名	Remarks	ランク
※	1	VB 65 79 00	Upper Case		アッパーケース		
※	2	VB 58 28 00	Keyboard Unit		キーボードユニット		
	3	CX 55 82 40	Key Top Set(other S,C,K)		キートップセット	A7KN037	
	3-1	CX 55 73 10	〃 (for S,C,K)	for LED KEY	キートップセットLED用	D2KN0011	
	4	CX 55 73 20	Key Top for SPACE Bar		スペースバーキートップ	80D9M 27000	
	5	AX 55 02 50	Key Top Guide Pin	SPACE Bar	キートップガイドピン	16KF006	
	6	AX 55 02 60	Lever Hook	Key Top(Middle)	レバーフック(キートップ用)	21KC013	
	7	AX 55 02 70	〃	SPACE Bar	〃 (スペースキー用)	21KC022	
	8	NX 55 03 00	Switch Assembly	CAPS, CODE	スイッチ駆動Ass'y	D4KN001	
	9	KX 55 04 60	Push Switch	for CAPS, CODE	プッシュスイッチ	SKCLFA000A	
	10	AX 55 02 20	Lever	l=1.75	レバー	21KC005	
	11	AX 55 02 30	〃	l=2.5	〃	21KC006	
	12	AX 55 02 40	〃	for SPACE Bar	〃	21KC020	
	13	AX 55 70 00	Guide	for SPACE Bar	スペースバーガイド	16KC004	
	14	AX 55 70 10	Lever Hinge		レバーヒンジ	19KC003	
	15	EX 55 00 20	Special Screw		特殊ネジ	50KN001	
	16	NX 55 05 80	A Point of Contact		接点Ass'y	B2KN020	
	17	NX 55 06 00	Circuit Board Assembly		基盤Ass'y	A4KN009	
		iG 11 97 00	IC	SN74LS31N	IC		
		iG 04 96 50	〃	SN74LS125AN	〃		
		iG 12 41 00	〃	SN74LS145N	〃		
		iG 05 01 00	〃	SN74LS175N	〃		
		iC 07 52 20	Transistor	2SC752	トランジスタ		
		iF 00 03 30	Diode	IS188	ダイオード		
		FG 74 34 70	Ceramic Cap.	4700PF	セラコン		
		FJ 14 82 20	Electrolytic Cap.	220μF 16V	ケミコン		
		LX 55 07 30	Connector		コネクタ	4N16005	
		LX 55 07 40	〃		〃	4N16006	
		LX 55 07 50	〃		〃	4N00605	
※	18	VB 33 16 00	Bottom Case		ボトムケース		
	19	VB 34 80 00	Foot		スペリ座		
※	20	VB 65 61 00	Snap Foot Assembly		スナップフットAss'y		
※	21	VB 34 79 00	Wire Kit	13P	束線キット		
	22	EI 33 00 86	Bind Head Tapping Screw	3X8 FCM3BL	バインドタッピングネジ	PACK	

※ : New Parts (NR)

ランク: Japan only

■ELECTRONIC PARTS

	Ref. No.	Part No.	Description	品名	Remarks	ランク
※		***VB 64 59 00***	***Circuit Board***	***CPU***	***AX-500***	
※						
	IC337	IG 12 19 00	IC	LH0080A	CPU	
	IC349	XA 03 70 03	〃	V9938	VDP(C)	
※	IC303	XA 83 40 01	〃	S1985 (YM-3814)	MPS2	
	IC301	XA 91 30 01	〃	SED9420C	D.Separator	
	IC302	IG 05 73 00	〃	MB8877M	FDC	
	IC321	IG 09 89 00	〃	HD74LS11	AND	
	IC309	IG 05 01 00	〃	HD74LS175P	DFF	
	IC310	IG 05 05 00	〃	HD74LS368AP	DRIV	IC305
	IC359	IG 11 53 00	〃	HD74LS670P	R.FILE	
	IC344	IG 13 49 00	〃	IR9311	Comparater	
	IC353	IG 00 13 90	〃	NJM4558DV	OP Amp.	
	IC357	IG 12 43 00	〃	PST518A	RESET	
	IC312	IG 02 69 10	〃	HD74LS00P	NAND	
	IC307	IG 02 70 10	〃	HD74LS04P	INV	IC305
	IC313	IG 05 91 00	〃	SN74LS06	INV/BUF	
	IC316	IG 04 37 50	〃	SN74LS08N	AND	
	IC315	IG 04 96 50	〃	SN74LS14N	INV	IC308, 316
	IC358	IG 04 97 50	〃	SN74LS30N	NAND	IC341
	IC304	IG 04 98 50	〃	SN74LS32N	OR	IC317, 346, 347
	IC306	IG 04 42 00	〃	HD74LS138P	3-8 DEC	
	IC314	IG 04 99 00	〃	HD74LS139P	DEC	
	IC326	IG 06 00 50	〃	SN74LS244N	DRIV	
	IC334	IG 04 46 00	〃	SN74LS245	TRAN.	
	IC325	IG 07 16 00	〃	SN74LS367N	DRIV	IC330, 333
	IC356	IG 06 03 50	〃	SN74LS373N	LA TCH	
	IC311	XA 05 50 01	〃	SN74ALS32N	OR	IC352
	IC339	IG 05 10 00	〃	TC40H004P	INV	
	IC345	IR 00 00 00	〃	TC74HC00P	NAND	
※	IC319	IR 01 57 00	〃	TC74HC157P	DATA-SE	IC322
	IC343	IG 14 22 00	〃	TC74HCU04	INV	
	IC323	XA 45 70 01	〃	MB81464-12	256K DRAM	IC327,329,331,335,338,340,342
※	IC320	XB 75 00 03	〃	MSX2-BASIC INT	ROM	
※	IC328	XB 75 10 05	〃	MSX2EX,DISC INT	〃	
※	IC332	XB 25 60 02	〃	YRG G.BIOS-L	〃	
※	IC336	XB 25 70 02	〃	YRG G.BIOS-H	〃	
※	IC324	XB 20 30 07	〃	ARABIC-OS,V2.0	〃	
	TR305	IA 09 33 00	Transistor (TR307,308,310)	2SA933S R	トランジスタ	
	TR302	IC 17 40 00	〃 (TR303,304,306,309)	2SC1740S R, S	〃	
	D304	VA 93 09 00	Diode (D305)	1SS114	ダイオード	
	D301	iF 00 34 50	〃 (D302,303,306~313)	1SS133, 1SS176	〃	
		FA 15 31 20	Mylar Cap.	0.0012μF 50V K	マイラーコン	
		FA 15 31 50	〃	0.0015μF 50V K	〃	
		FA 15 33 30	〃	0.0033μF 50V K	〃	
		FA 15 41 10	〃	0.01μF 50V K	〃	
		FA 15 42 20	〃	0.022μF 50V K	〃	
		FA 15 44 70	〃	0.047μF 50V K	〃	
		FA 15 51 00	〃	0.1μF 50V K	〃	
		FG 41 11 50	Ceramic Cap.	15PE 50V K	セラコン	
		FG 41 12 20	〃	22PE 50V K	〃	
		FG 41 12 70	〃	27PF 50V K	〃	

※ : New Parts (NR)

ランク: Japan only

	Ref. No.	Part No.	Description		品名	Remarks	ランク
		FG 41 13 90	Ceramic Cap.	39PF 50V K	セラコン		
		FG 41 16 80	〃	68PF 50V K	〃		
		FG 44 41 00	〃	0.01μF 50V Z	〃		
		UJ 13 82 20	Electrolytic Cap.	220μF 16V	ケミコン		
		UJ 12 82 20	〃	220μF 10V	〃		
		UJ 13 81 00	〃	100μF 16V	〃		
		UJ 14 72 20	〃	22μF 25V	〃		
		UJ 12 81 00	〃	100μF 10V	〃		
		UJ 12 84 70	〃	470μF 10V	〃		
		UJ 16 81 00	〃	1μF 50V	〃		
		UJ 16 62 20	〃	2.2μF 50V	〃		
		UJ 16 64 70	〃	4.7μF 50V	〃		
		UJ 13 71 00	〃	10μF 16V	〃		
		UK 34 64 70	〃	4.7μF 25V	BPケミコン		
		FZ 00 41 10	Semiconductive Cera.	0.1μF 16V M	半導体セラコン		
※	TC301 TC302	VB 65 04 00	Variable Resistor	30PF CTZ-51F	可変コンデンサ		
	RM318	HZ 00 28 70	Resistor Array	RMLS4-103J	抵抗アレイ		
	RM306	HZ 00 46 60	〃 (RM308,310,316 319,320)	RMLS8-103J	〃		
	RM304	HZ 00 51 20	〃 (RM315,317)	RMLS4-102J	〃		
	RM305	VA 06 97 00	〃 (RM313)	RMLS4-472J	〃		
	RM302	VA 09 22 00	〃 (RM303,307,309 311,312)	RMLS8-223J	〃		
※	RM301	VB 65 00 00	〃	RMLS8-222J	〃		
	L301	GE 30 03 50	Coil	68μH	コイル		
	CR304	QU 00 92 00	Quartz Crystal Unit	21.4773MHz	水晶振動子		
	CR301	VA 07 09 00	〃	32.768KHz	〃		
	CR303	VC 01 26 00	〃	3.5795MNz	〃		
	CR302	VB 65 06 00	Ceramic Resonator	16MHz	セラミック振動体		
		Fi 36 32 20	EMI Filter	LS MT X222MB	EMIフィルター		
		VB 45 27 00	〃	EXC-EMT271T	〃		
		VB 45 28 00	〃	EXC-EMT471T	〃		
		VB 45 30 00	〃	EXC-EMT222J	〃		
	SW1	VA 06 69 00	Push Switch	SPJ-312U	プッシュスイッチ		
	RL301	VB 59 82 00	Relay	DC AG4019	リレー		
		AA 55 40 00	Heat Sink		VDPヒートシンク		
		LB 60 73 30	IC Socket		ICソケット		
		VB 64 55 00	PC Joiner		PCジョイナー		
	CN315	VB 09 77 00	Connector	8P	DINコネクタ		
	CN301	VB 24 54 00	〃	13P TCS1001-01-202	〃		
	CN314	VB 00 79 00	〃	14P	アンフェノール		
	CN313	VB 32 12 00	〃	50P D05-50SA -1L1	コネクタ		
	CN302	LB 60 80 50	〃 (CN303)	9P	〃		
	CN309	LB 91 80 30	Base Post	3P I-TYPE	ベースポスト		
	CN304	LB 93 20 40	〃	4P	〃		
	CN308	VB 32 11 00	Header	50P	ヘッダー		
		VB 31 70 00	Wire Kit	13P	束線キット(Video)	Video Unit	
		VB 31 71 00	〃	4P	〃 (FDD)	FDD PU	
		VB 31 72 00	〃	34P	〃 (FDD)	FDD Unit	
		VB 31 76 00	〃	50P	〃 (SLOT)	SLOT C.B	
		VB 84 79 00	Circuit Board	ROM Board	ROMシート		

※ : New Parts (NR)

ランク: Japan only

■ELECTRONIC PARTS

	Ref. No.	Part No.	Description	品名		Remarks	ランク
※		***VB 22 59 00***	***Circuit Board***	***SLOT***	***S L O T シート***	***AX500***	
		UJ 13 81 00	Electrolytic Cap.	100μF 16V	ケミコン		
		UJ 12 82 20	〃	220μF 10V	〃		
		FZ 00 41 10	Semiconductive Cera. Cap.	0.1μF 16V Z	半導体セラコン		
	RM901	HZ 00 47 40	Resistor Array(PM902~904)	RMLS8-472J	抵抗アレイ		
	LD1	VA 85 63 00	LED	TLR-208(red)	LED		
		VB 73 84 00	PC Joiner		PCジョイナー		
	CN905	LB 91 90 30	Base Post	3P L-TYPE	ベースポスト		
	CN904	LB 91 80 40	〃	4P I-TYPE	〃		
	CN901	VB 32 13 00	Connector (CN902)	50P 479-25-30-142-1	ZIFコネクター		
	CN903	VB 31 76 00	Wire Kit	50P 23768	束線キット		
※		***VB 84 79 00***	***Circuit Board***	***ROM Board***	***R O M シート***	***AX-500***	
※		XB 44 10 02	IC	ROM	SAKHR MAIN (L)		
※		XB 74 80 01	〃	〃	SAKHR SUB (H)		
※		XB 74 90 01	〃	〃	ARABIC W/P		
※		FJ 72 81 00	Electrolytic Cap.		ケミコン		
※		FZ 00 41 10	Semiconductive Cera. Cap.		半導体セラコン		
※		HF 85 61 00	Resistor		抵抗		
※		VB 90 62 00	Header		ヘッダー		

※ : New Parts (NR)

ランク: Japan only

■AX-500 POWER SUPPLY UNIT ELECTRONIC COMPONENTS (VB657500)

	Ref. No.	Part No.		Description	品名	Remarks	ランク
	IC101	iX 55 31 10	IC	IR9431	シャフトレギュレータ		
※	PC101	iX 55 44 00	〃	PC817	フォトカプラ		
※	Q101	iX 55 44 10	Transistor	2SC3376	トランジスタ		
※	Q102	iX 55 44 20	〃	2SC2655-Y	〃		
	Q104,105	iC 18 15 30	〃	2SC1815-GR	〃		
	Q106	iA 10 15 30	〃	2SA1015-GR	〃		
	Q104	iX 55 31 40	〃	2SC3303-Y	〃		
	Q107	iX 55 31 50	〃	2SC2877-Y	〃		
	D101	iX 55 39 00	Diode	S1WB60	ブリッジダイオード		
	D102	iX 55 39 10	〃	F1-08	ファーストリカバリダイオード		
	D103	iX 55 31 80	〃	1SS144	シリコンダイオード		
	D104,105	iF 00 06 70	〃	1S2473	〃		
	D106	iX 55 31 70	〃	ESAC82M-004	ショットキーバリアダイオード		
※	D107	iX 55 44 30	〃	SM-3-02FRLF	ファーストリカバリダイオード		
	D108,109	iX 55 39 20	〃	F1-02	〃		
	T101	GX 55 06 20	Switching Transformer		スイッチングトランス	EI-35	
	L101	GX 55 04 20		752YOR4	スモンモードチョーク		
	L102	GX 55 04 30	Coil (Rod type)	10μH 棒状	チョークコイル		
	L103,104	GX 55 04 40	〃 (Drum type)	10μH ドラム	〃		
※	C102,103	FX 55 15 80	Ceramic Cap.	0.0022μF 4KV	セラミックコンデンサ	TYPE KD	
※	C106	FX 55 15 90	〃	0.00033μF 1KV	〃	TYPE KD	
	C101	FX 55 10 80		0.1μF 250VAC	メタライズドコンデンサ	TYPE VE	
	C105	FX 55 10 80		0.01μF 630V	〃	TYPE MMH	
※	C107	FA 46 43 30		0.033μF 50V	ポリエステルコンデンサ	TYPE AMZ	
	C108,110	FX 55 12 10		0.047μF 〃	〃	〃	
※	C109	FA 15 51 00		0.1μF 〃	〃	〃	
	C104	FX 55 16 00	Electrolytic Cap.	150μF 400V	電解コンデンサ		
	C111	UJ 72 94 70	〃	4700μF 10V	〃		
	C112	UJ 12 92 20	〃	2200μF 〃	〃		
	C113~116	UJ 42 83 30	〃	330μF 〃	〃		
	C119	UJ 13 81 00	〃	100μF 16V	〃		
	C118	UW67 64 70	〃	4.7μF 63V	〃		
	C117	UJ 16 61 00	〃	1μF 50V	〃		
	R108	HL 32 61 50	Metal Oxide Resistor	1.5Ω 2W	酸化金属被膜抵抗		
	R106,107	HL 32 61 00	〃	1KΩ 〃	〃		
	R102,103	HL 32 76 80	〃	68KΩ 〃	〃		
	R104,105	HL 32 81 00	〃	100KΩ 〃	〃		
	R110,111	HX 55 17 40	〃	47Ω 3W	〃		
	R116	HL 31 52 20	Carbon Resistor	220Ω 1/2W	カーボン抵抗		
	R117,118	HL 31 58 20	〃	820Ω 〃	〃		
	R122	HL 30 71 00	〃	10KΩ 〃	〃		
	R113	HJ 35 41 00	〃	10Ω 1/4W	〃		
	R119	HJ 35 44 70	〃	47Ω 〃	〃		

※ : New Parts (NR)

ランク: Japan only

■AX-500 POWER SUPPLY UNIT ELECTRONIC COMPONENTS

Ref. No.	Part No.	Description		品名	Remarks	ランク
R114	HJ 35 45 60	Carbon Resistor	56Ω 1/4W	カーボン抵抗		
R123,124,126	HJ 35 51 00	〃	100Ω 〃	〃		
R125	HJ 35 52 70	〃	270Ω 〃	〃		
R115	HJ 35 53 30	〃	330Ω 〃	〃		
R112	HJ 35 55 60	〃	560Ω 〃	〃		
R109	HJ 35 61 20	〃	1.2KΩ 〃	〃		
R120	HJ 35 63 00	〃	3KΩ 〃	〃		
R121	HJ 35 63 60	〃	3.6KΩ 〃	〃		
R127	HJ 35 81 00	〃	100KΩ 〃	〃		
R101	HX 55 16 40	Cement Resistor	3.3Ω 3W	セメント抵抗		
VR101	HX 55 14 00	Variable Resistor	1KΩ	半固定抵抗		
	LX 55 06 90	Fuse Clip		ヒューズクリップ		
	KB 00 23 60	Fuse	T2A 250V	ヒューズ		
	LX 55 06 00	Connector	5277-02A	コネクター 2P		
	NX 55 06 30	〃		コネクター3P Ass'y		
	NX 55 06 40	〃		コネクター4P Ass'y		
	AX 55 02 80	Support Transistor		サポートトランジスタ		
	CX 55 60 20	Heat Sink Tube	サーコンFR, t=0.45	チューブタイン		
	BX 55 00 90	Heat Sink		放熱板		
	BX 55 01 00	〃	Al, 2t	〃		
	EV 41 00 36	Washer Pan Head Screw	M3×8プラス	歯付座金付ナベ小ネジ	PC板・放熱板	
	ED 03 00 66	Bind Head Screw	M3×8プラス	バインド小ネジ	トランジスタ放熱板	
	Ei 03 01 46	Bind Head Tapping Screw	3×14バインドプラス	タッピングネジ	サポートトランジスタ	

※：New Parts (NR)

ランク: Japan only

■AX-500 VIDEO MODULE UNIT ELECTRONIC COMPONENTS (VB657700)

Ref. No.	Part No.	Description		品名	Remarks	ランク
	iG 02 70 10	IC	74LS04	I C	IC201	
	iX 55 28 90	〃	LVA510	〃	IC202	
	HJ 35 41 80	Resistor	18Ω 1/4W	抵抗	R243~245	
	HF 85 46 80	〃	68Ω 1/6W	〃	R217,222	
	HF 85 52 20	〃	220Ω 〃	〃	R201,202,205,216,256	
	HF 85 55 60	〃	560Ω 〃	〃	R246,254	
	HF 85 56 80	〃	680Ω 〃	〃	R204,240	
	HF 85 58 20	〃	820Ω 〃	〃	R210	
	HF 85 61 00	〃	1KΩ 〃	〃	R207,209,223,228,229,231,234,236	
	HF 85 61 80	〃	1.8KΩ 〃	〃	R203,224,255	
	HF 85 62 20	〃	2.2KΩ 〃	〃	R249,253	
	HF 85 63 30	〃	3.3KΩ 〃	〃	R206	
	HF 85 66 80	〃	6.8KΩ 〃	〃	R225	
	HF 85 71 00	〃	10KΩ 〃	〃	R214,218,233,248	
	HF 85 71 50	〃	15KΩ 〃	〃	R215	
	HF 85 72 20	〃	22KΩ 〃	〃	R212	
	HF 85 73 90	〃	39KΩ 〃	〃	R230,252	
	HF 85 75 60	〃	56KΩ 〃	〃	R231,251	
	HF 85 76 80	〃	68KΩ 〃	〃	R250	
			1.8KΩ or 4.7KΩ		R245	
	UJ 12 81 00	Electrolytic Cap.	100μ 10V	ケミコン	C207,210,233	
	UJ 12 83 30	〃	330μ 〃	〃	C211,227~229	
	UJ 13 71 00	〃	10μ 16V	〃	C201~204,217	
	UJ 13 81 00	〃	100μ 〃	〃	C205,231	
	UJ 16 61 00	〃	1μ 50V	〃	C216,218	
	FG 21 11 80	Ceramic Cap.	18P	セラコン	C237	
	FG 21 12 20	〃	22P	〃	C238	
	FG 21 15 60	〃	56P	〃	C213	
	FG 21 13 90	〃	39P	〃	C212,220,236	
	FG 21 21 00	〃	100P	〃	C215,221	
	FG 21 21 50	〃	150P	〃	C219,225	
	FG 21 22 20	〃	220P	〃	C222,223	
	FG 21 24 70	〃	470P	〃	C209,234	
	FG 41 31 00	〃	1000P	〃	C215,235	
	FG 44 42 20	〃	22000P	〃	C206,208,209,214,230,232	
	IC 23 20 30	Transistor	2SC458	トランジスタ	Q204,205,207,208,110,111	
		〃	2SC1684	〃	Q201~203,206	
		〃	2SC1317	〃	Q209	
	iX 55 30 90	Diode	1SS106	ダイオード	D201~203	
	iX 80 11 90	〃	1SS119	〃	D204~207	
	HX 55 13 70	Present Potentiometer	2K	プリセット	VR201	
	HX 55 13 80	〃	10K	〃	VR202	
	GX 55 03 60	Inductor	22μH	インダクター	L201	
	GX 55 06 00	〃	33μH	〃	L202	
	QX 55 00 40	Quartz Resonator	4.433619MHz	水晶振動子	X201	
	KX 55 04 30	Slide Switch		スライドSW.	SW201	

※ : New Parts (NR)

ランク: Japan only

■AX-500 OVERALL CIRCUIT DIAGRAM

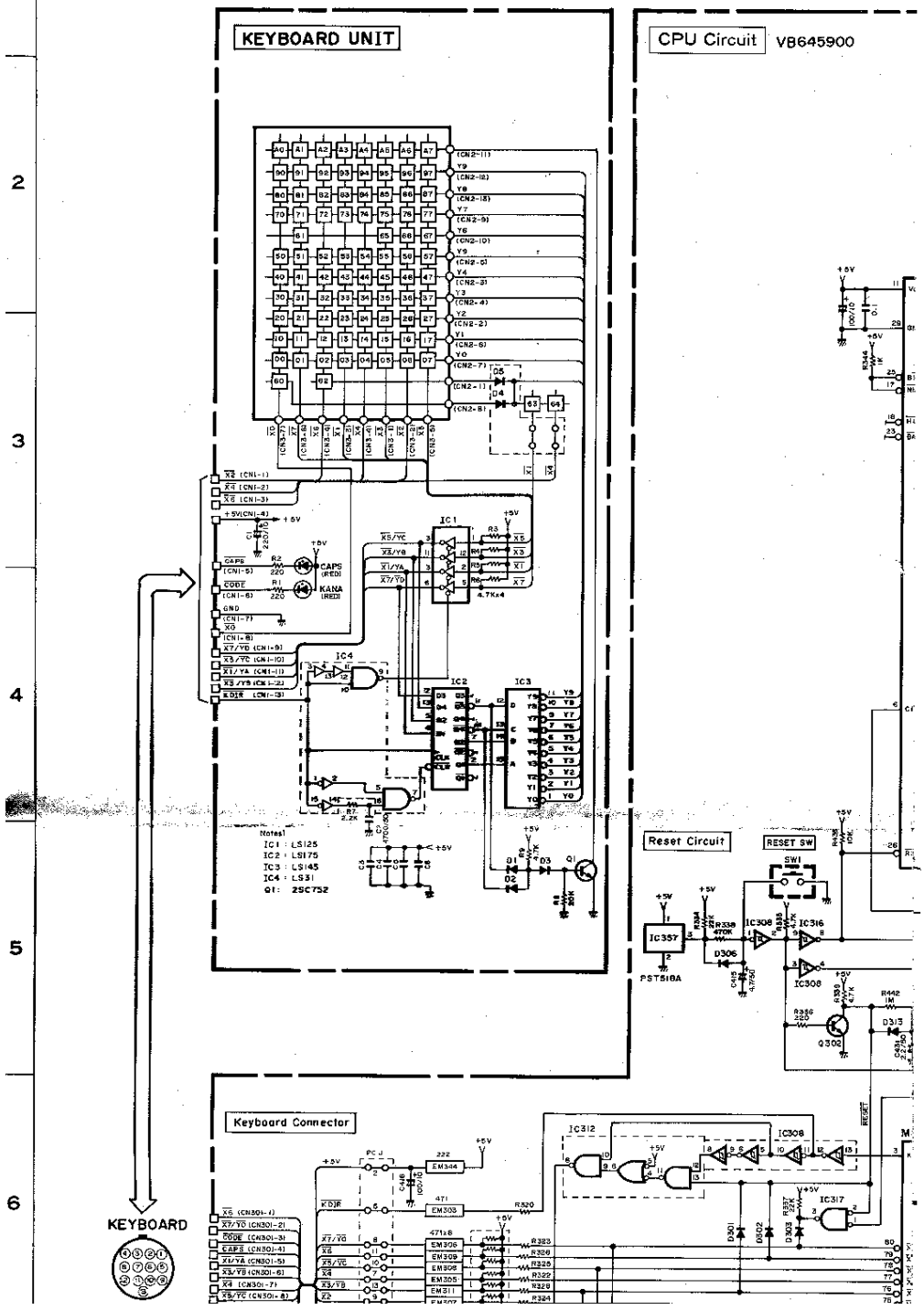

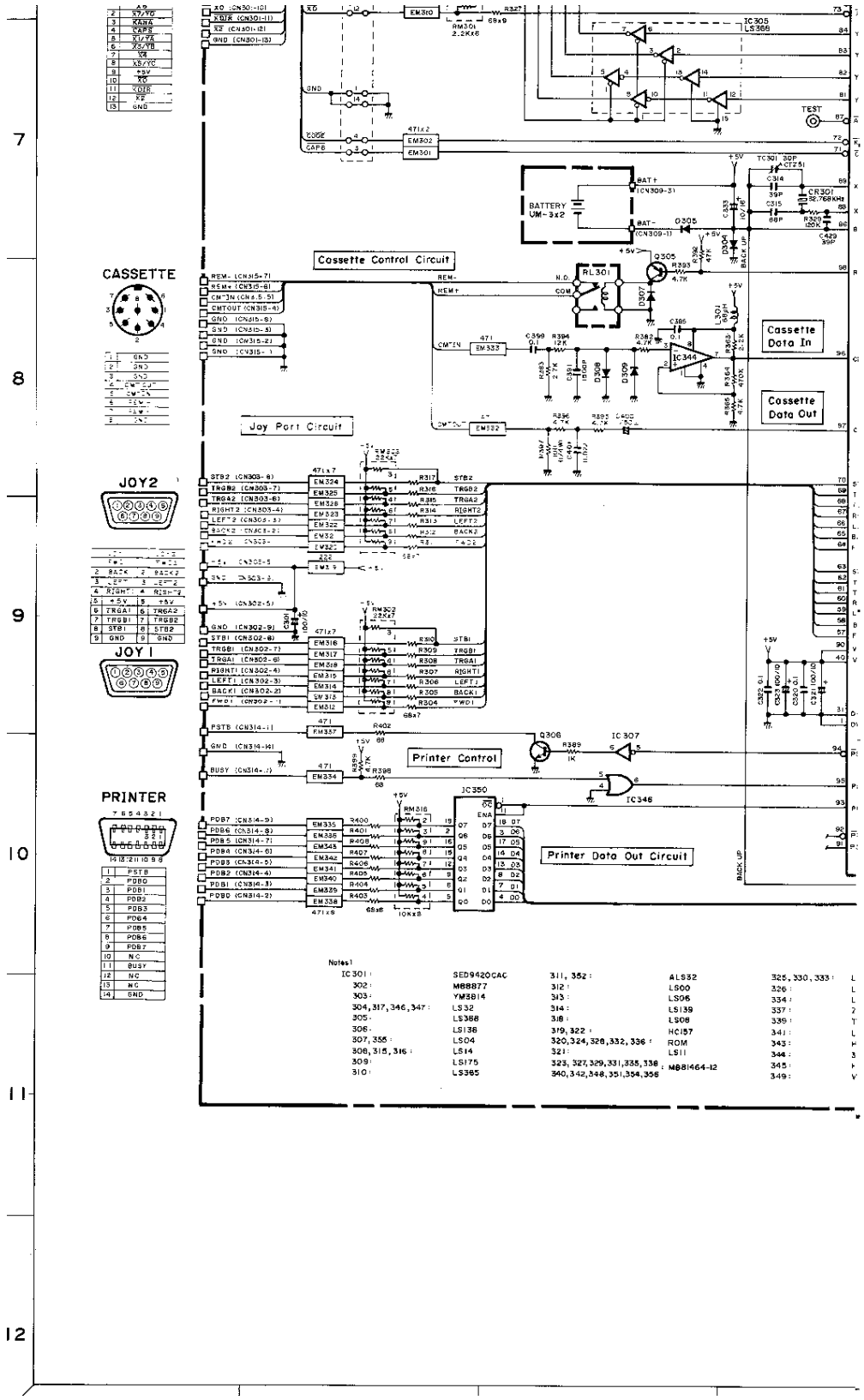

Notes:

IC301 :	SED9420CAC	311, 352 :	ALS32	325, 330, 333 :	L
302 :	M88877	312 :	LS00	326 :	L
303 :	YM3814	313 :	LS06	334 :	L
304, 317, 346, 347 :	LS32	314 :	LS139	337 :	2
305 :	LS368	318 :	LS08	339 :	T
306 :	LS138	319, 322 :	HC157	341 :	L
307, 355 :	LS04	320, 324, 328, 332, 336 :	ROM	343 :	H
308, 315, 316 :	LS14	321 :	LS11	344 :	3
309 :	LS175	323, 327, 329, 331, 335, 338 :	M881464-12	345 :	H
310 :	LS365	340, 342, 348, 351, 354, 356		349 :	V

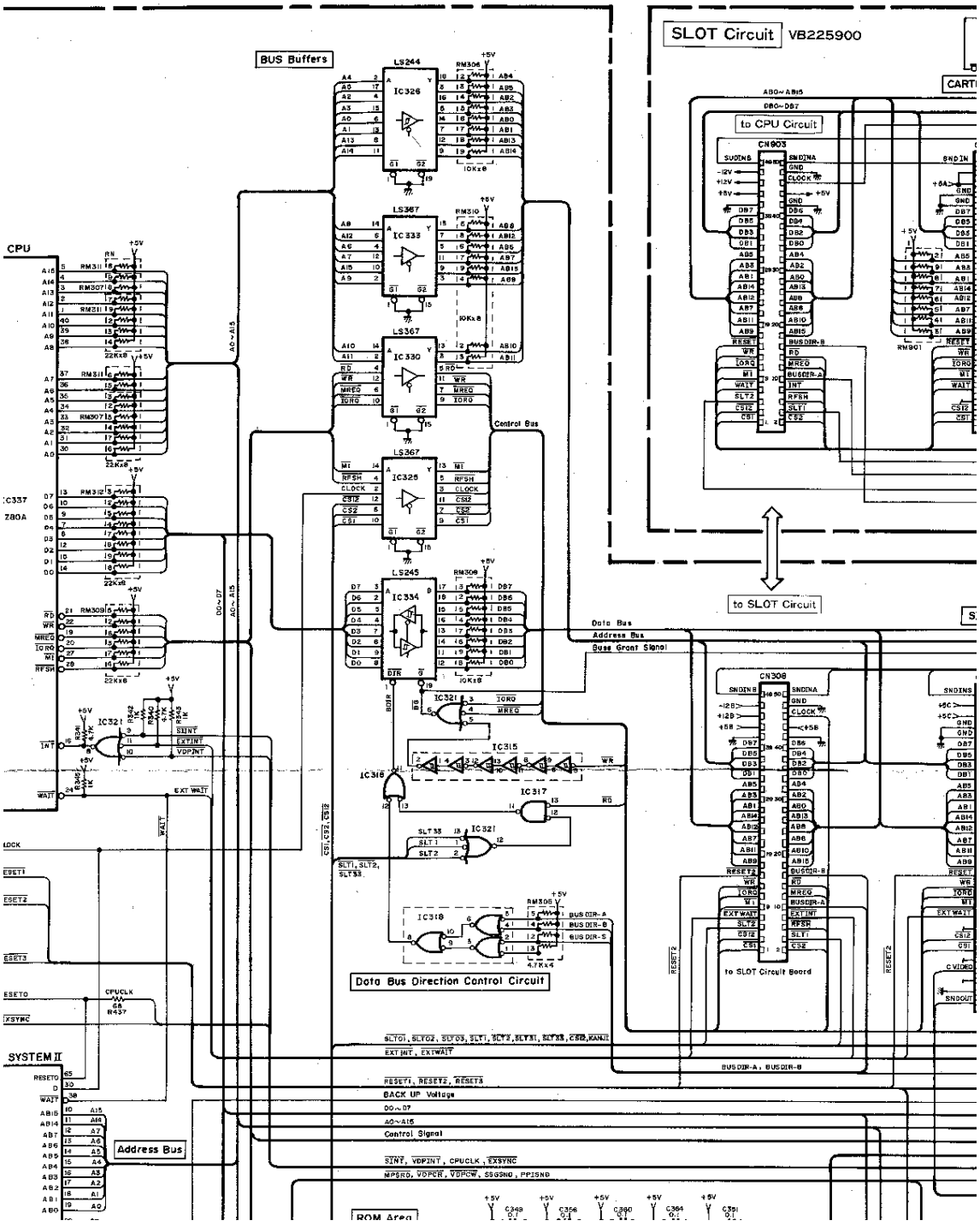
SLOT Circuit VB225900
BUS Buffers
CPU
to CPU Circuit
to SLOT Circuit
Control Bus
Data Bus
Address Bus
Buse Grant Signal
Data Bus Direction Control Circuit
SYSTEM II
Address Bus
ROM Area
BACK UP Voltage
Control Signal
to SLOT Circuit Board

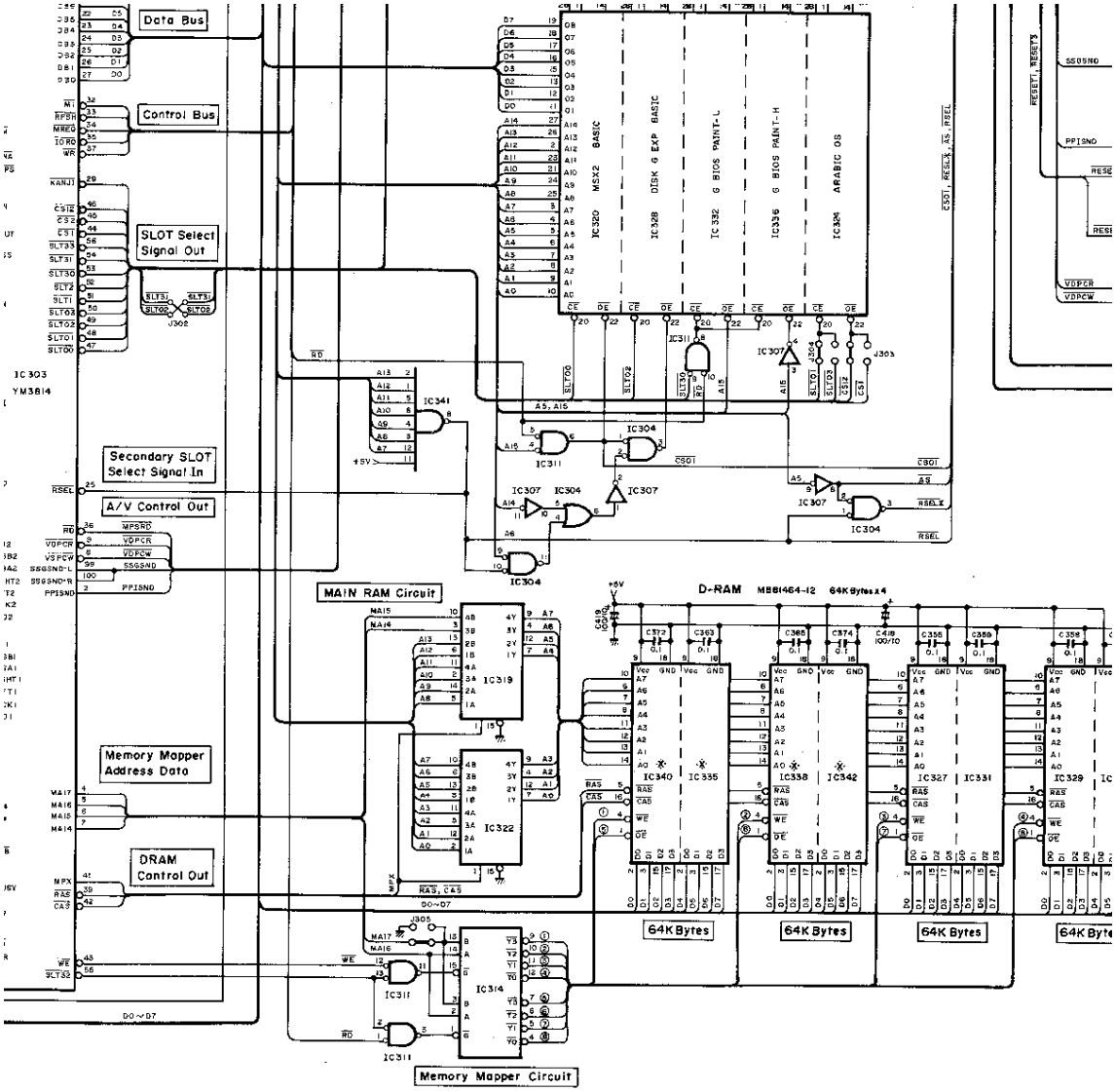

367 or HC367	350 : LS373	Q 302~304,306,309 :	2SC1815 or 2SC1740
244 or HC244	353 : 4558DV	305, 307, 308, 310 :	2SA1015 or 2SA933
245	357 : PST518A	D 301~303, 306~313 :	1SS133 or 1SS176
DA	358 : HC30	304, 305 :	1SS114
40H004P	359 : LS670		
30			
J04			
C			
00			
9938			

EMI Filter EM =

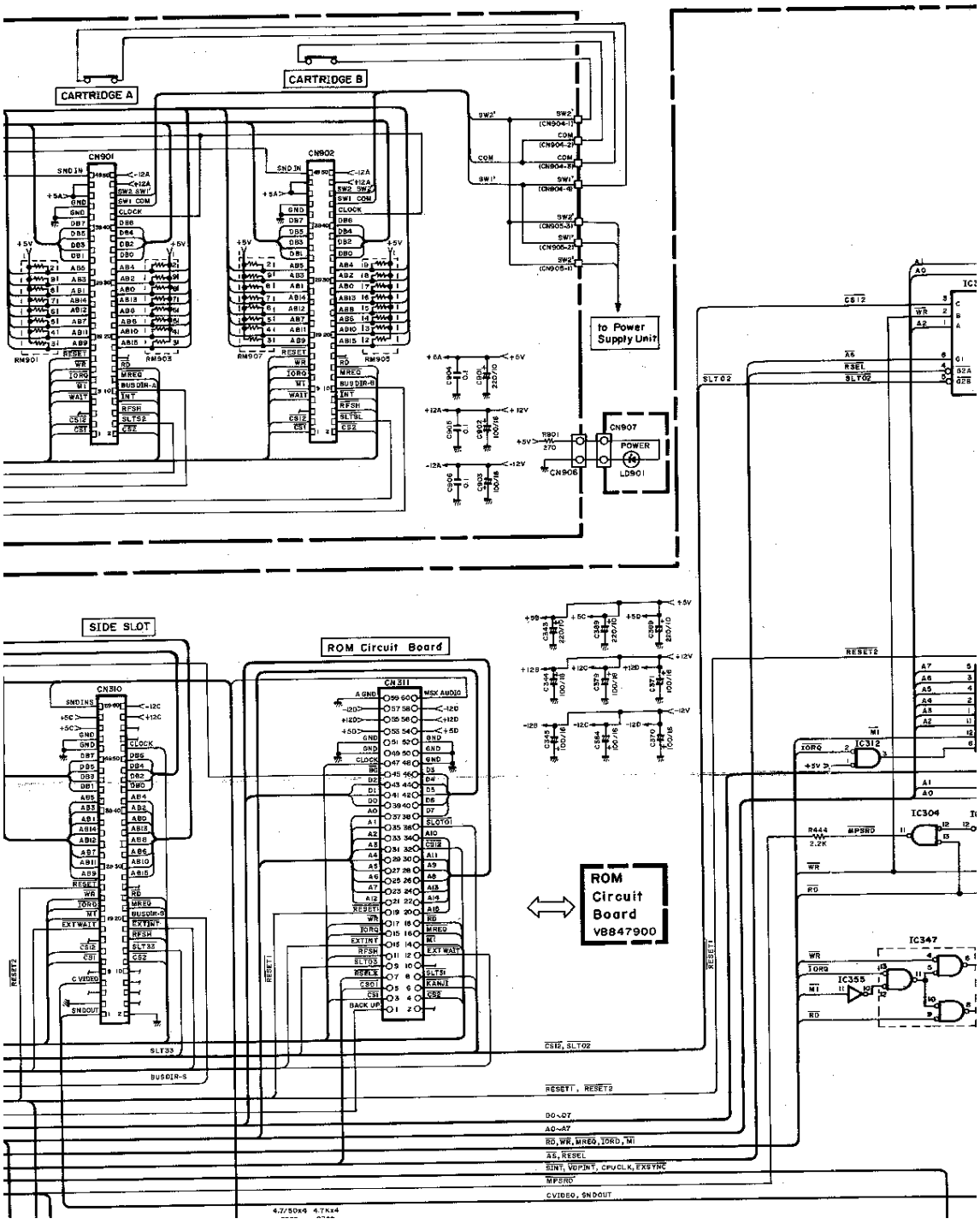
CARTRIDGE A
CARTRIDGE B
CN901
CN902
RM901
RM903
RM907
RM905
to Power Supply Unit
CN907
POWER
LD901
CN906
SIDE SLOT
ROM Circuit Board
CN310
CN311
ROM Circuit Board VB847900
IC312
IC304
IC347
IC355
SLT02
SLT33
BUSDIR-S
CS12, SLT02
RESET1, RESET2
D0~D7
A0~A7
RD, WR, MREQ, IORQ, M1
AS, RESEL
SINT, VDPINT, CPUCLK, EXSYNC
MPSRO
CVIDEO, SNDOUT

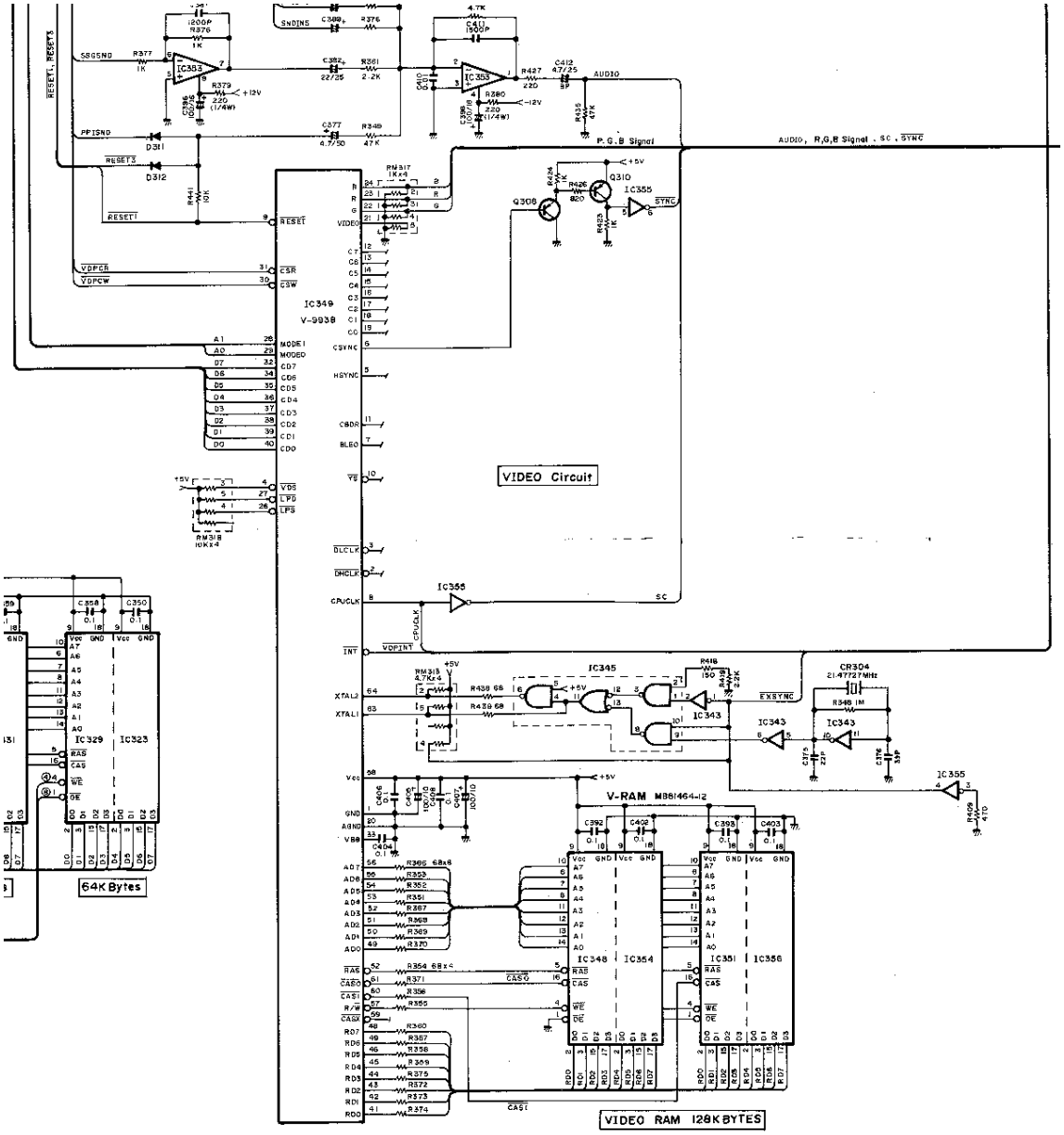

VIDEO Circuit
IC349
V-9938
IC353
IC355
IC345
IC343
IC348
IC354
IC351
IC356
IC329
IC323
V-RAM M881464-12
64K Bytes
VIDEO RAM 128K BYTES
P.G.B Signal
AUDIO, R,G,B Signal, SC, SYNC

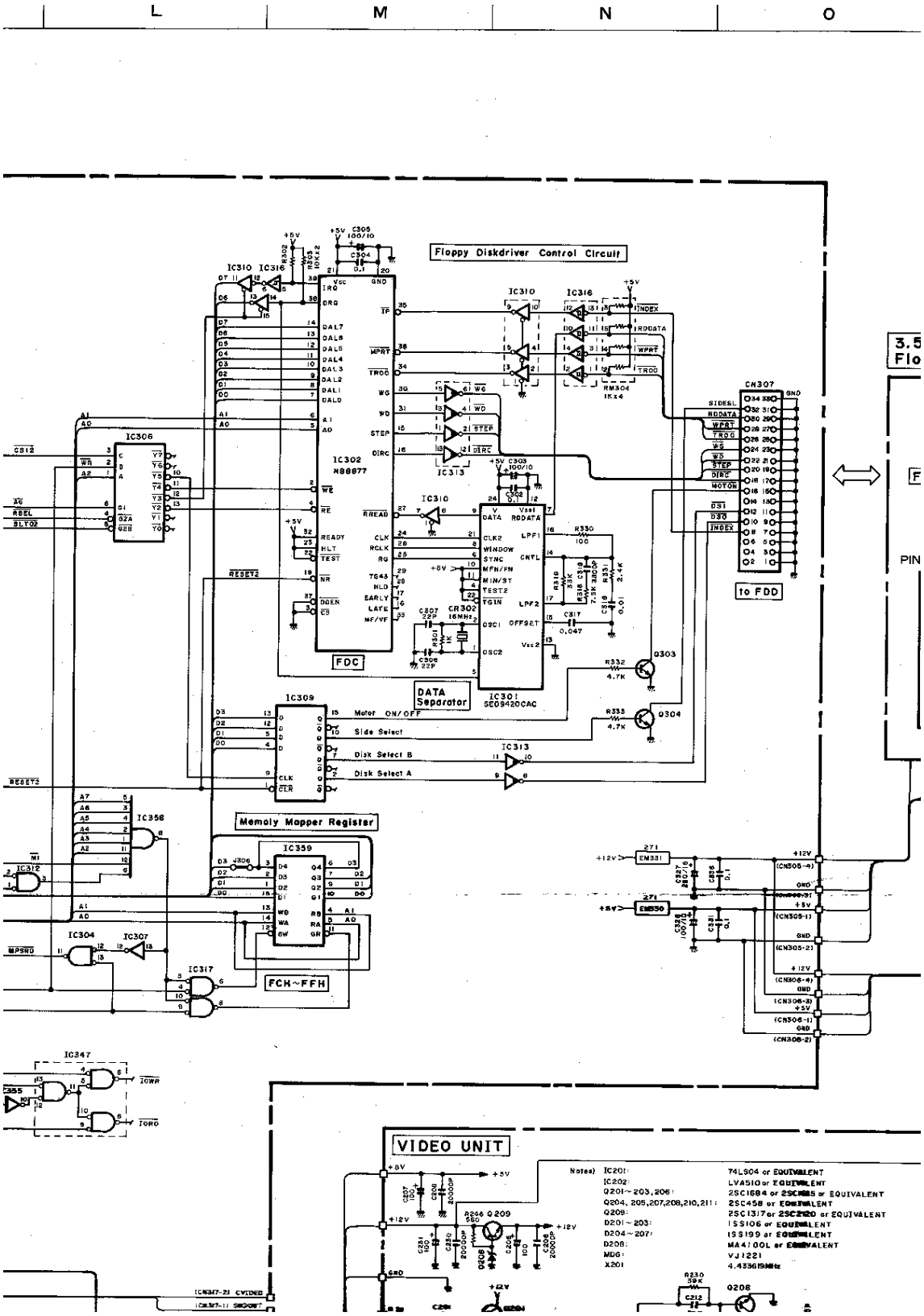
L
M
N
O
Floppy Diskdriver Control Circuit
IC302
N88877
FDC
DATA Separator
IC301
SE09420CAC
IC309
Motor ON/OFF
Side Select
Disk Select B
Disk Select A
Memoly Mapper Register
IC359
FCH~FFH
IC306
IC310
IC316
IC313
IC312
IC304
IC307
IC317
IC347
IC358
CN307
to FDD
3.5
Flo
PIN
VIDEO UNIT
Notes) IC201: 74LS04 or EQUIVALENT
IC202: LVA510 or EQUIVALENT
Q201~203,206: 2SC1684 or 2SC1685 or EQUIVALENT
Q204, 205,207,208,210,211: 2SC458 or EQUIVALENT
Q209: 2SC1317 or 2SC2120 or EQUIVALENT
D201~203: 1SS106 or EQUIVALENT
D204~207: 1SS199 or EQUIVALENT
D208: MA4100L or EQUIVALENT
MD6: VJ1221
X201 4.433619MHz

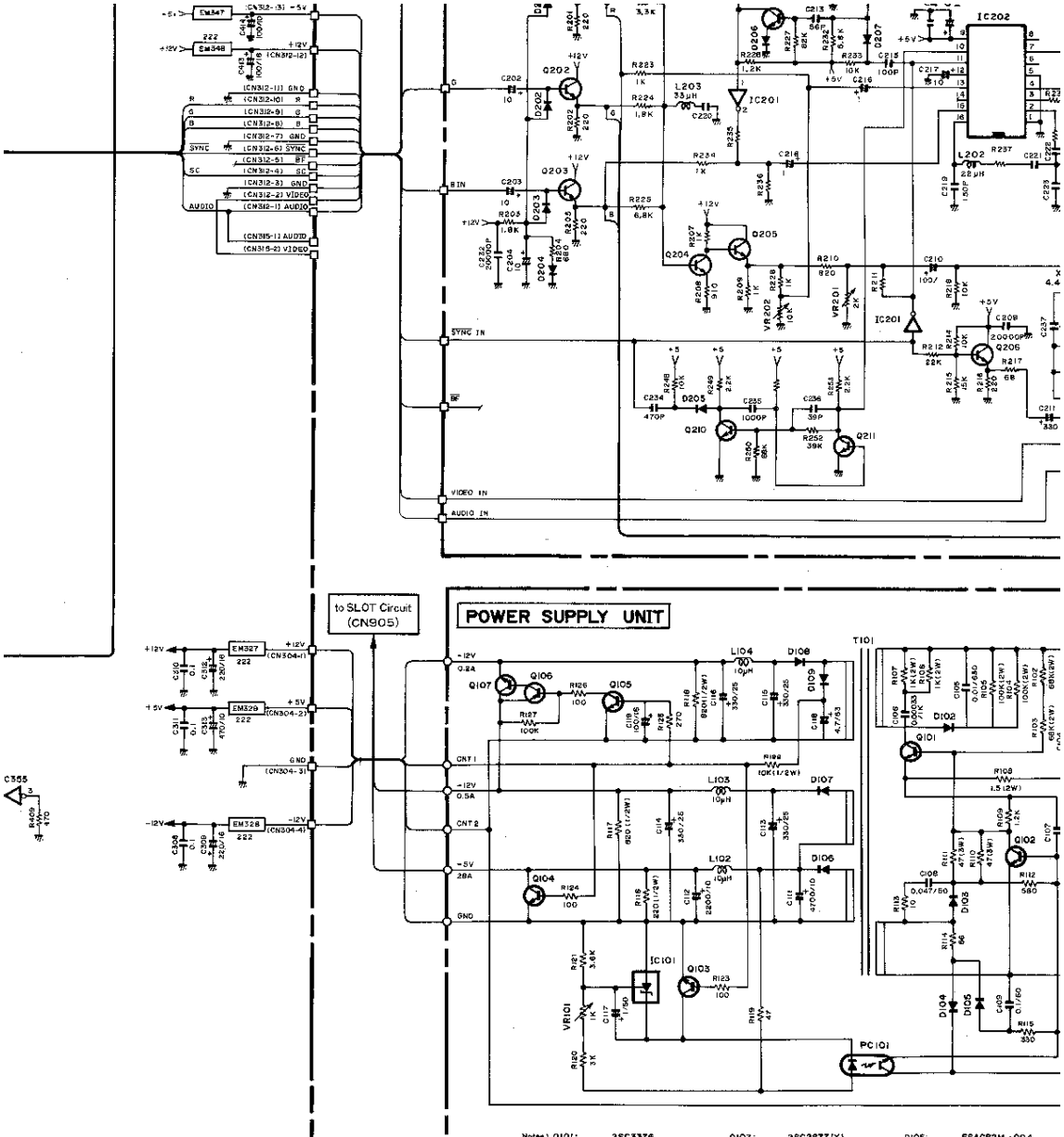

Notes) Q101: 2SC3376
Q102: 2SC2655 (Y)
Q103,105: 2SC1815 (Y) (GR)
Q104: 2SC3303 (Y)
Q106: 2SA1015 (Y) (GR)
Q107: 2SC2877 (Y)
D101: SIW860
D102: F1-06
D103: ISS144
D104,105: IS2473
D106: ESAC82M-004
D107: SM-3-02FRLF
D108,109: F1-02
IC101: IR-9431
PC101: PC817 (C) (D)

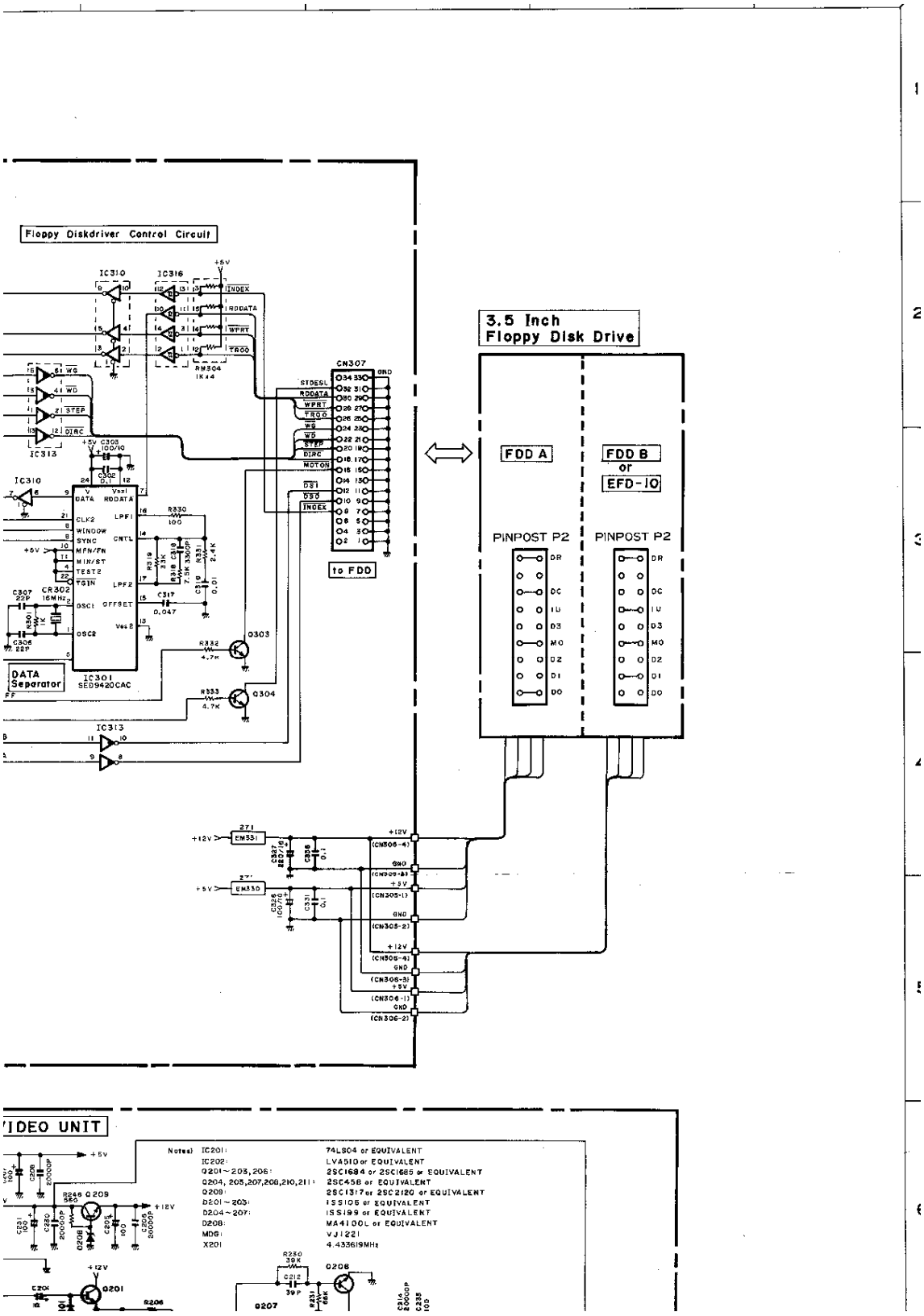
Floppy Diskdriver Control Circuit
IC310
IC316
RM304
1K x 4
INDEX
RDDATA
WPRT
TRQO
WG
WD
STEP
DIRC
IC313
CN307
STDESL
MOTON
DS1
DS0
GND
to FDD
IC301
SED9420CAC
DATA Separator
CR302
16MHz
Q303
Q304
3.5 Inch
Floppy Disk Drive
FDD A
FDD B
or
EFD-10
PINPOST P2
DR
DC
IU
D3
MO
D2
D1
D0
+12V
+5V
EM331
EM330
(CN306-4)
(CN306-3)
(CN306-1)
(CN306-2)
VIDEO UNIT
Q209
Q201
Q206
Q207
Notes) IC201: 74LS04 or EQUIVALENT
IC202: LVA510 or EQUIVALENT
Q201~203,206: 2SC1684 or 2SC1685 or EQUIVALENT
Q204, 205,207,208,210,211: 2SC458 or EQUIVALENT
Q209: 2SC1317 or 2SC2120 or EQUIVALENT
D201~203: 1SS106 or EQUIVALENT
D204~207: 1SS199 or EQUIVALENT
D208: MA4100L or EQUIVALENT
MD6: VJ1221
X201 4.433619MHz

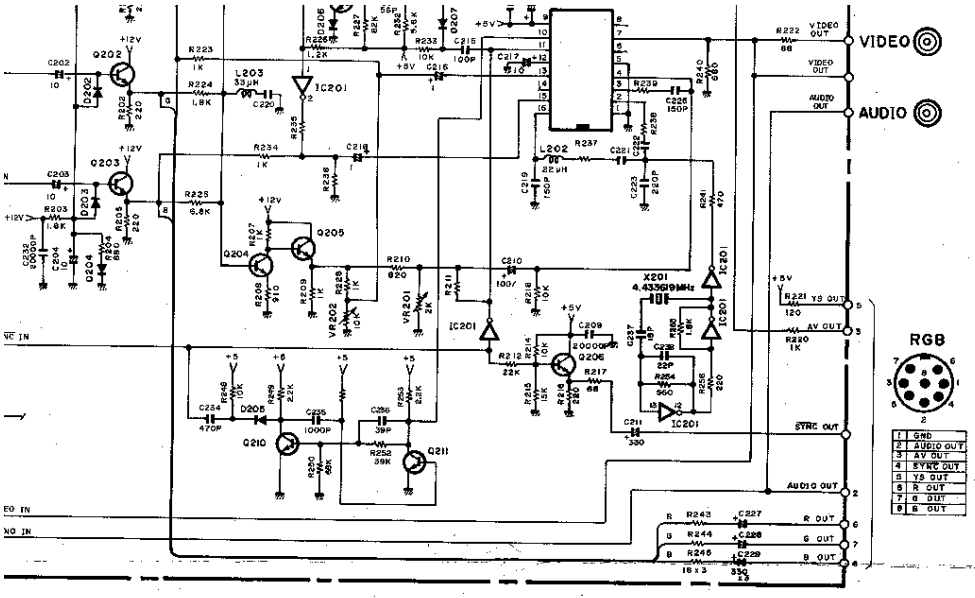

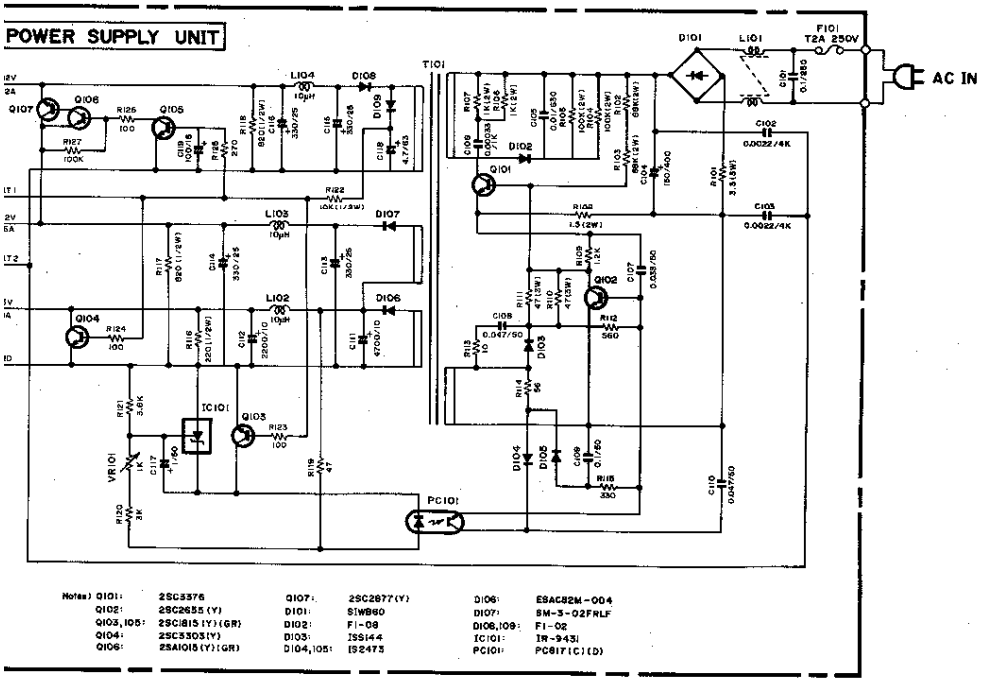

Notes) Q101: 2SC5376
Q102: 2SC2655 (Y)
Q103, 105: 2SC1815 (Y) (GR)
Q104: 2SC5303 (Y)
Q106: 2SA1015 (Y) (GR)
Q107: 2SC2877 (Y)
D101: S1WB60
D102: FI-08
D103: 1SS144
D104, 105: 1S2473
D106: ESAC82M-004
D107: SM-3-02FRLF
D108, 109: FI-02
IC101: IR-943I
PC101: PC817 (C) (D)

N O P Q

■ POWER SUPPLY UNIT CIRCUIT BOARD

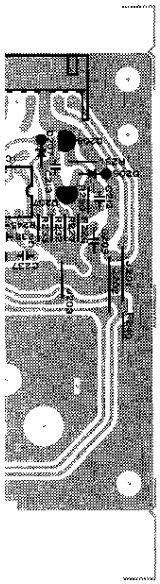

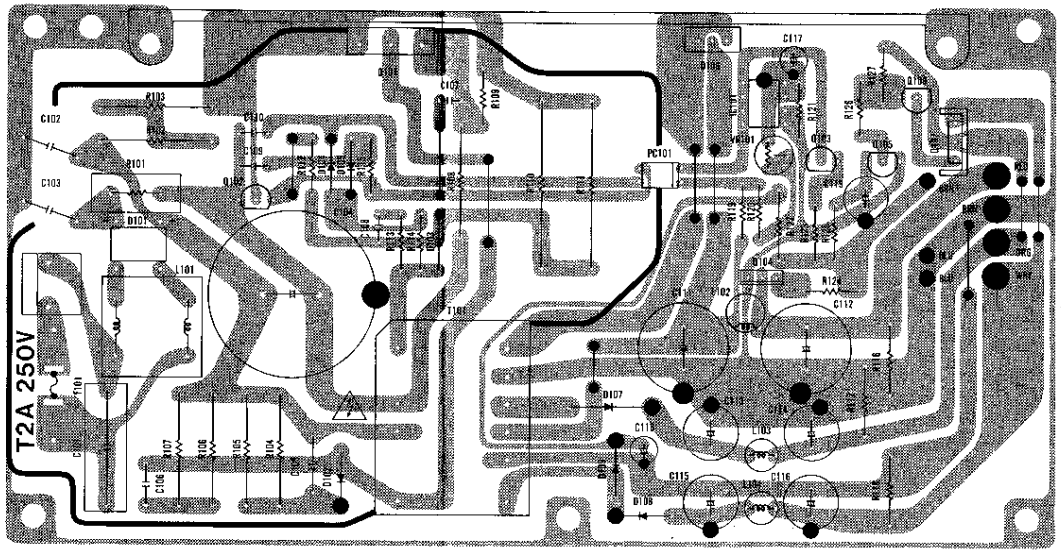

■ SUB ROM CIRCUIT BOARD

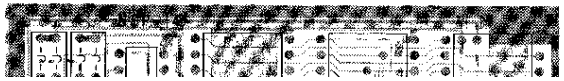

■ VIDEO UNIT CIRCUIT BOARD

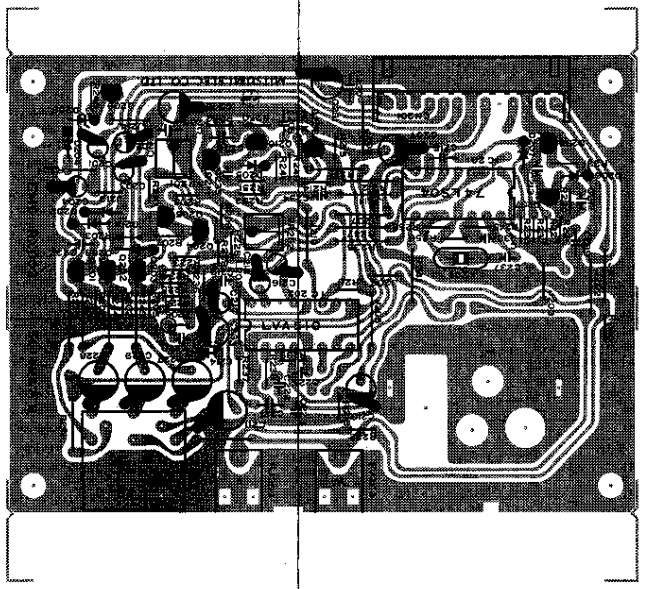

■ POWER SUPPLY UNIT CIRCUIT

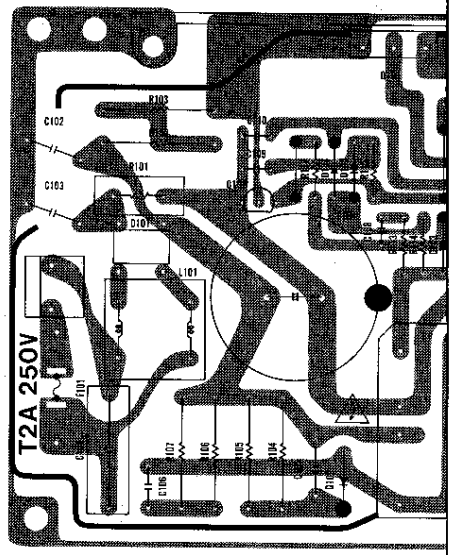

■ SUB ROM CI

■ SLOT CIRCUIT BOARD

■ SUB ROM CIRCUIT BOARD

D

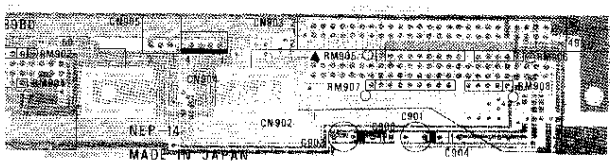

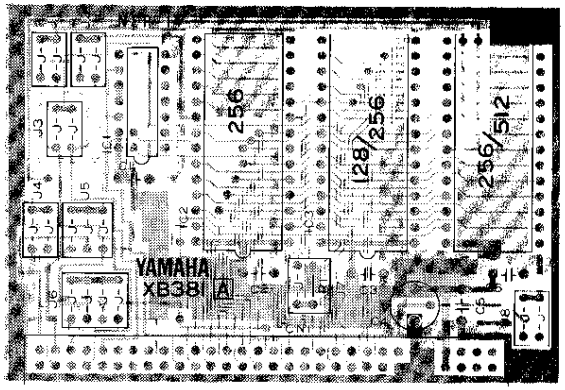

PC joiner (50mm 14 core)
VB64550

1550

● Note 4

Connect each +5V side of C311 and C320 with a jumper wire.

Electrolytic
100/10
+

■AX-500 ROM

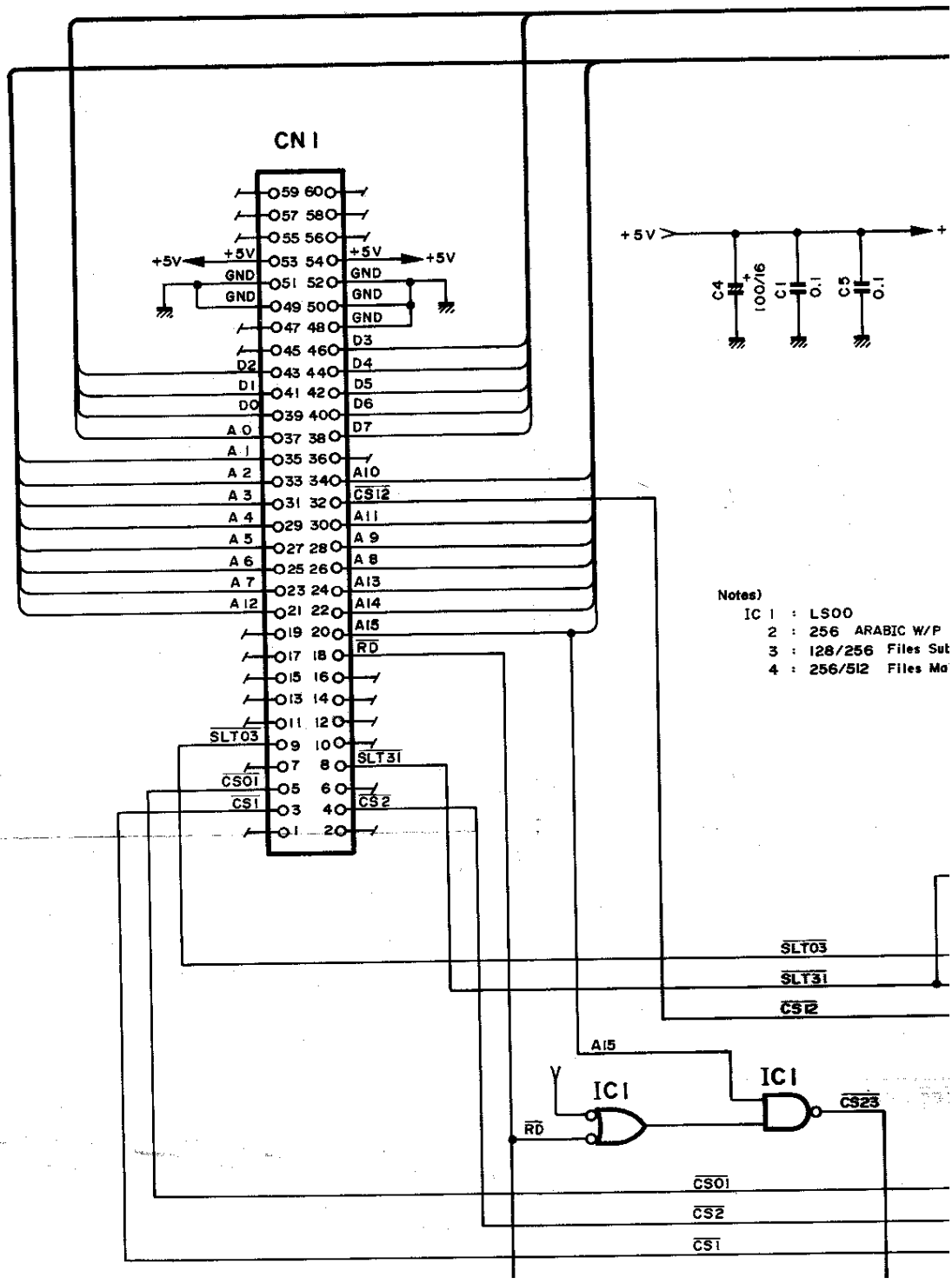
CN 1
59 60
57 58
55 56
+5V 53 54 +5V
GND 51 52 GND
GND 49 50 GND
47 48
45 46 D3
D2 43 44 D4
D1 41 42 D5
D0 39 40 D6
A 0 37 38 D7
A 1 35 36
A 2 33 34 A10
A 3 31 32 CS12
A 4 29 30 A11
A 5 27 28 A 9
A 6 25 26 A 8
A 7 23 24 A13
A 12 21 22 A14
19 20 A15
17 18 RD
15 16
13 14
11 12
SLT03 9 10
7 8 SLT31
CSO1 5 6
CS1 3 4 CS2
1 20
+5V
C4 100/16
C1 0.1
C5 0.1
Notes)
IC 1 : LS00
2 : 256 ARABIC W/P
3 : 128/256 Files Sut
4 : 256/512 Files Ma
SLT03
SLT31
CS12
A15
IC1
IC1
RD
CS23
CSO1
CS2
CS1

■VIDEO UNIT CIRCU

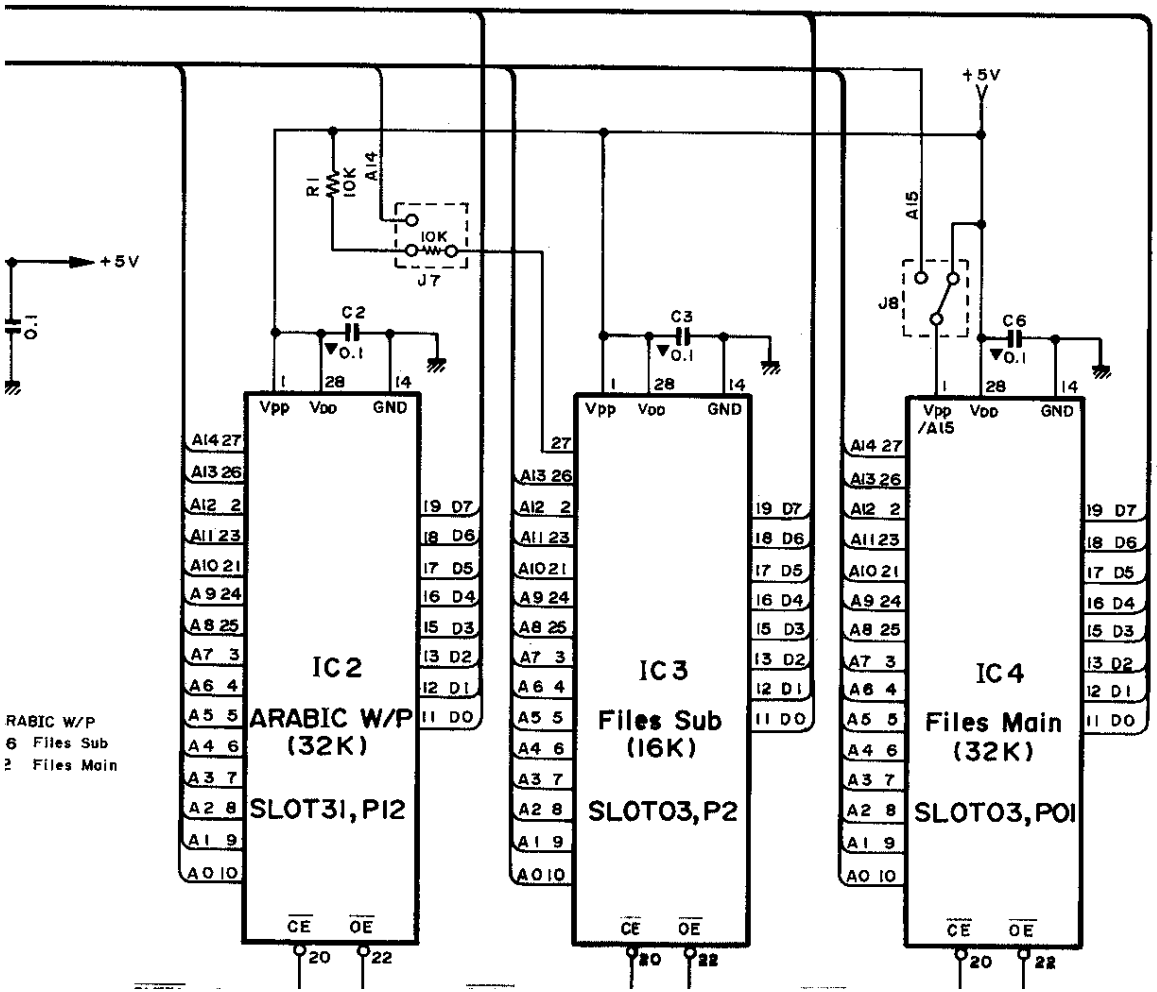

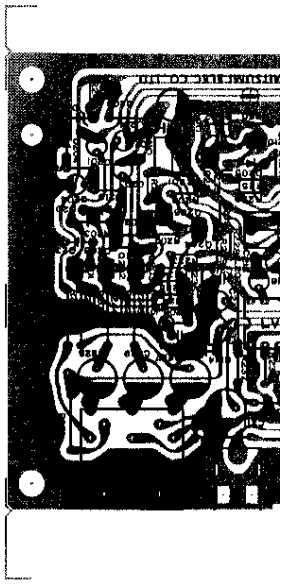

■SLOT CIRCUIT BO

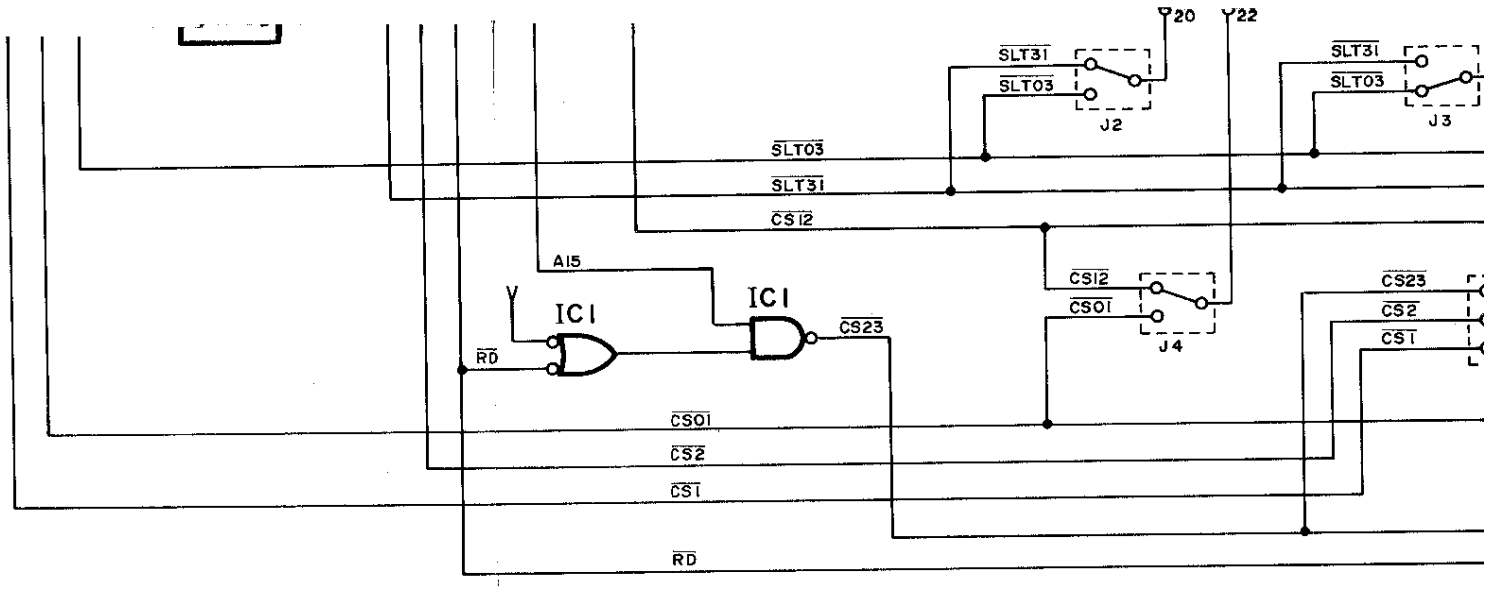
20
22
SLT31
SLT03
J2
SLT31
SLT03
J3
SLT03
SLT31
CS12
A15
IC1
IC1
CS12
CS01
J4
CS23
CS2
CS1
RD
CS23
CS01
CS2
CS1
RD

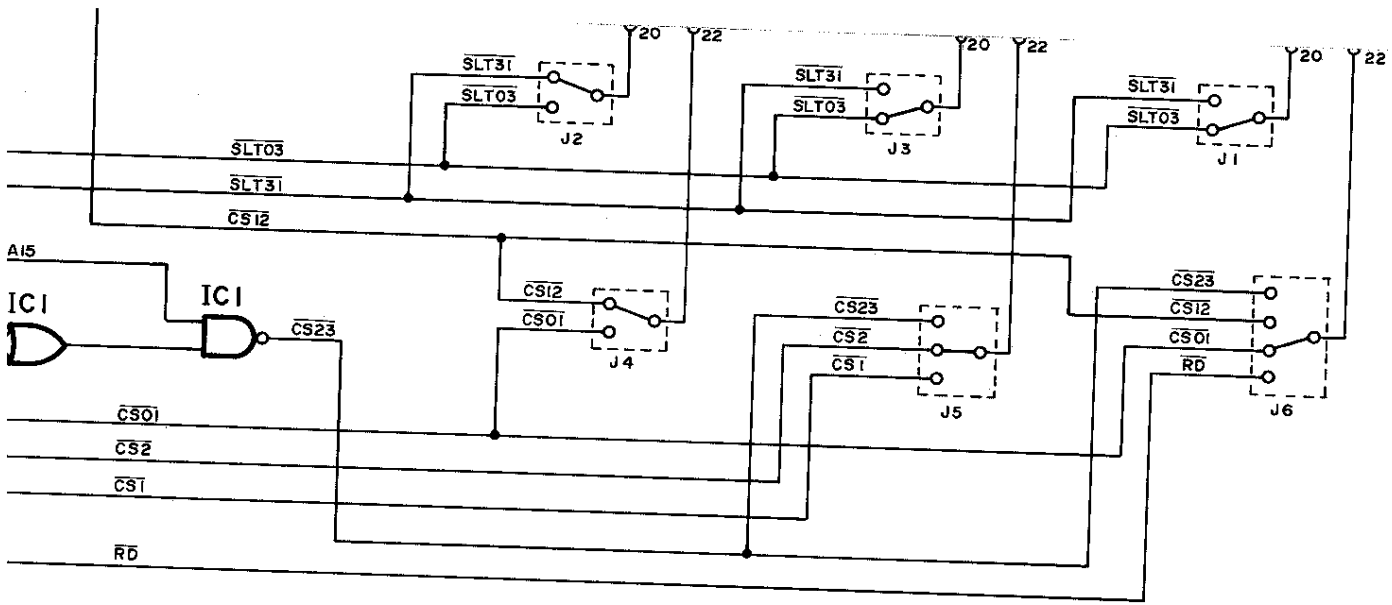
20
22
SLT31
SLT03
J2
J3
J1
SLT03
SLT31
CS12
A15
IC1
IC1
CS23
CS12
CS01
J4
CS23
CS2
CS1
J5
CS23
CS12
CS01
RD
J6
CS01
CS2
CS1
RD

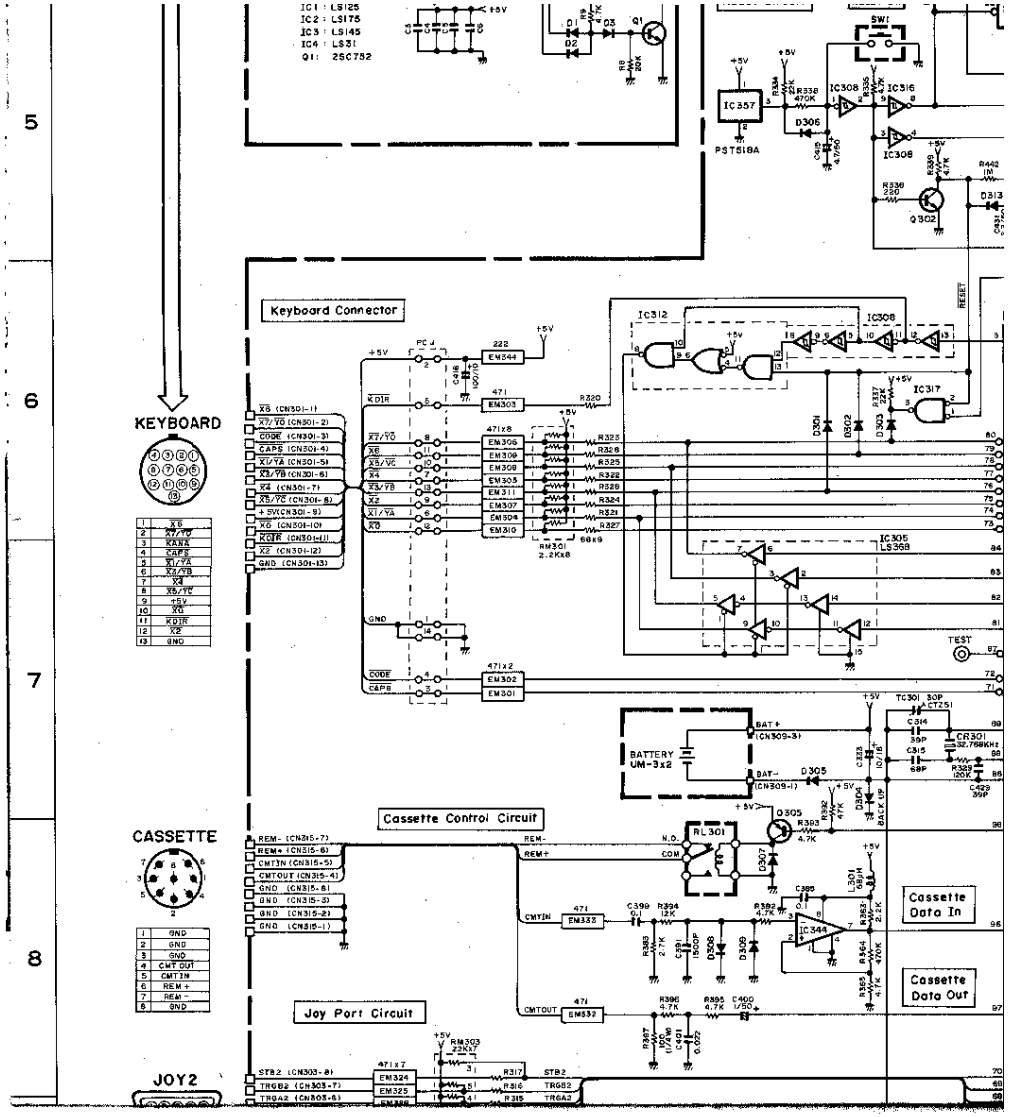

IC1 : LS125
IC2 : LS175
IC3 : LS145
IC4 : LS31
Q1 : 2SC752
KEYBOARD
CASSETTE
JOY2
Keyboard Connector
Cassette Control Circuit
Joy Port Circuit
Cassette Data In
Cassette Data Out
BATTERY UM-3x2
TEST
RESET

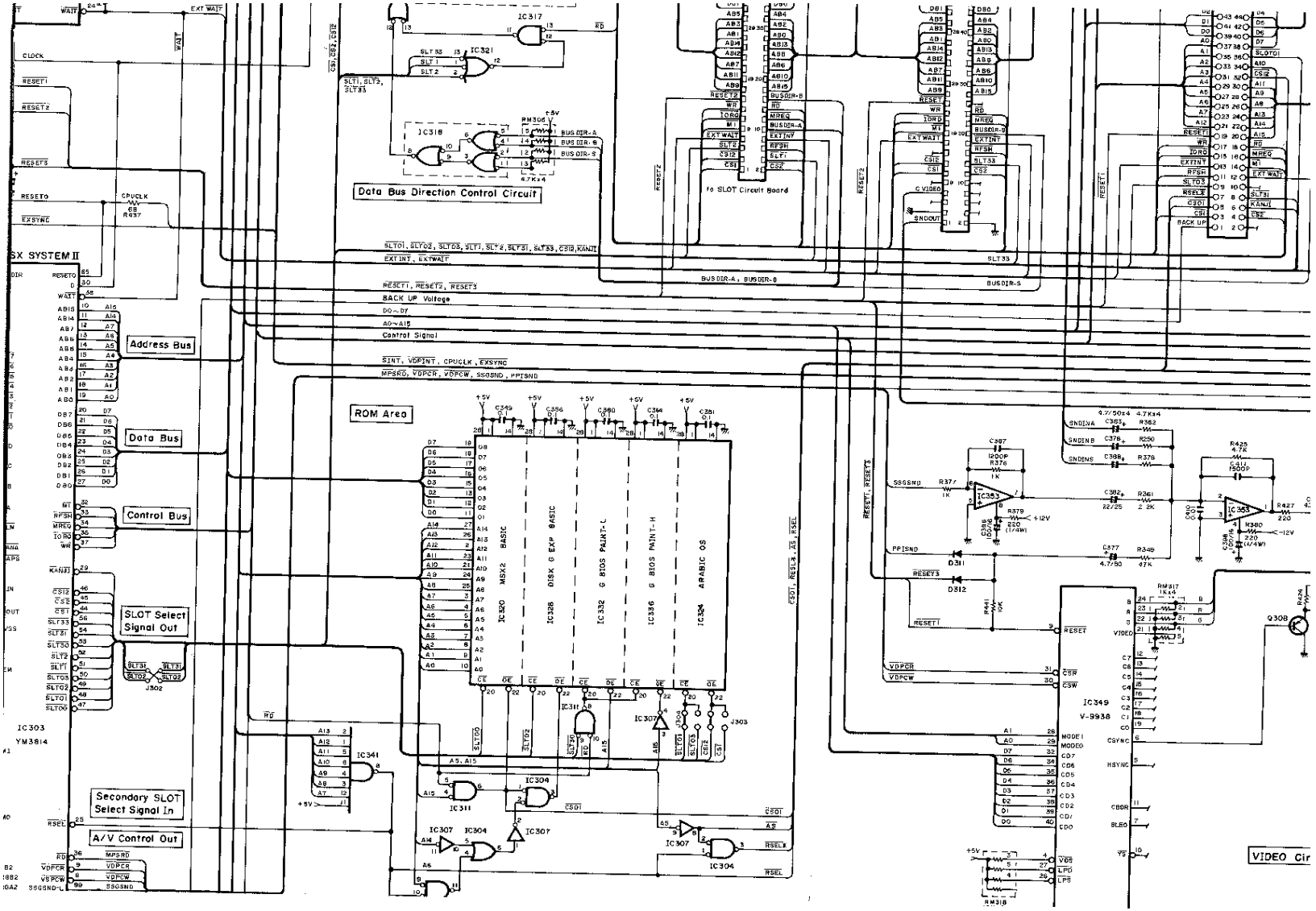
Data Bus Direction Control Circuit
ROM Area
Address Bus
Data Bus
Control Bus
SLOT Select Signal Out
Secondary SLOT Select Signal In
A/V Control Out
IC303 YM3814
IC320 MSX2 BASIC
IC328 DISK & EXP BASIC
IC332 G BIOS PAINT-L
IC336 G BIOS PAINT-H
IC324 ARABIC OS
IC349 V-9938
VIDEO Cir

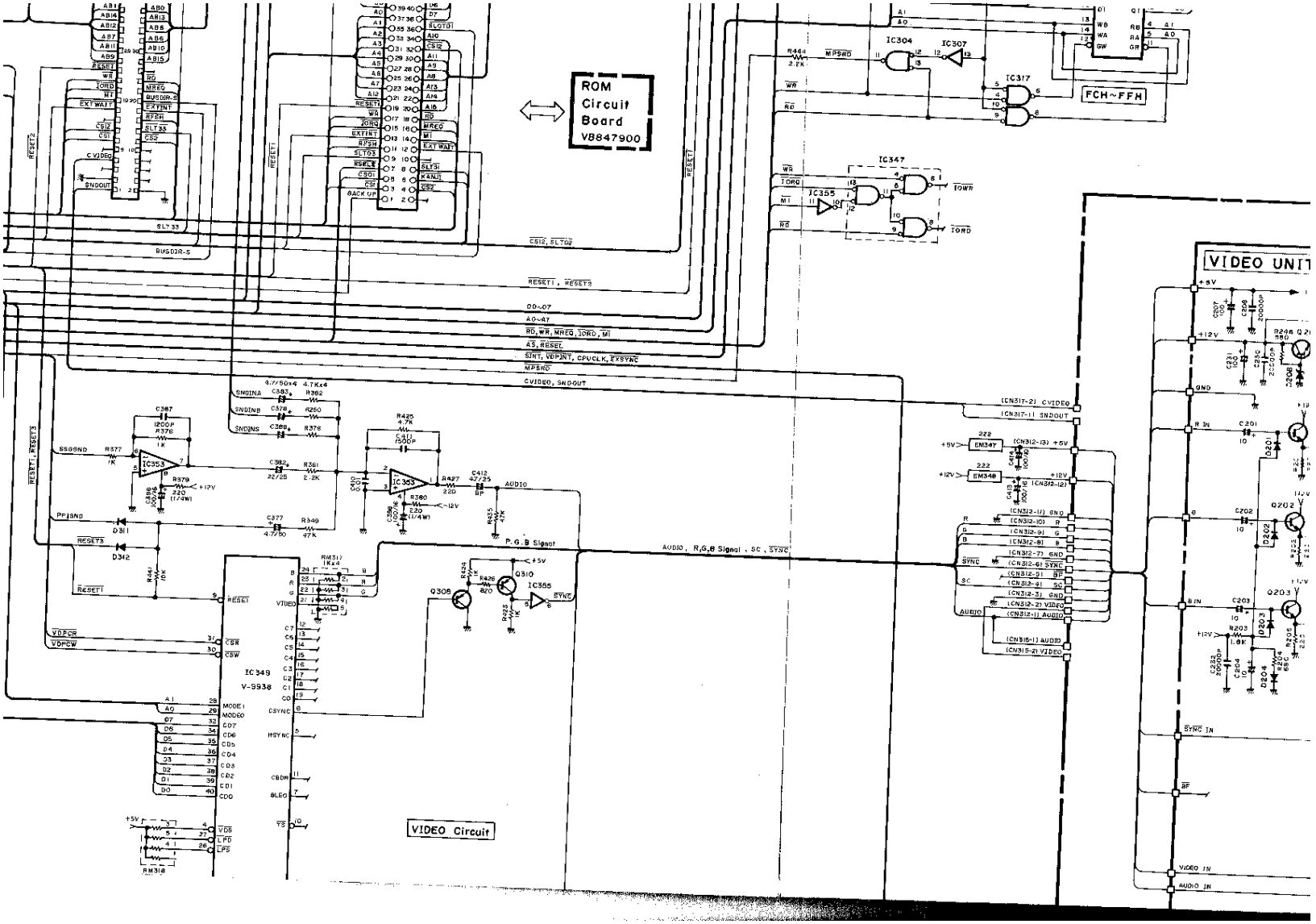
ROM
Circuit
Board
VB847900
FCH~FFH
VIDEO UNIT
VIDEO Circuit
IC349
V-9938
IC353
IC355
IC304
IC307
IC317
IC347
IC355
IOWR
IOND
P.G.B Signal
AUDIO, R,G,B Signal, SC, SYNC
CVIDEO, SNDOUT
RESET1, RESET3
SYNC IN
VIDEO IN
AUDIO IN

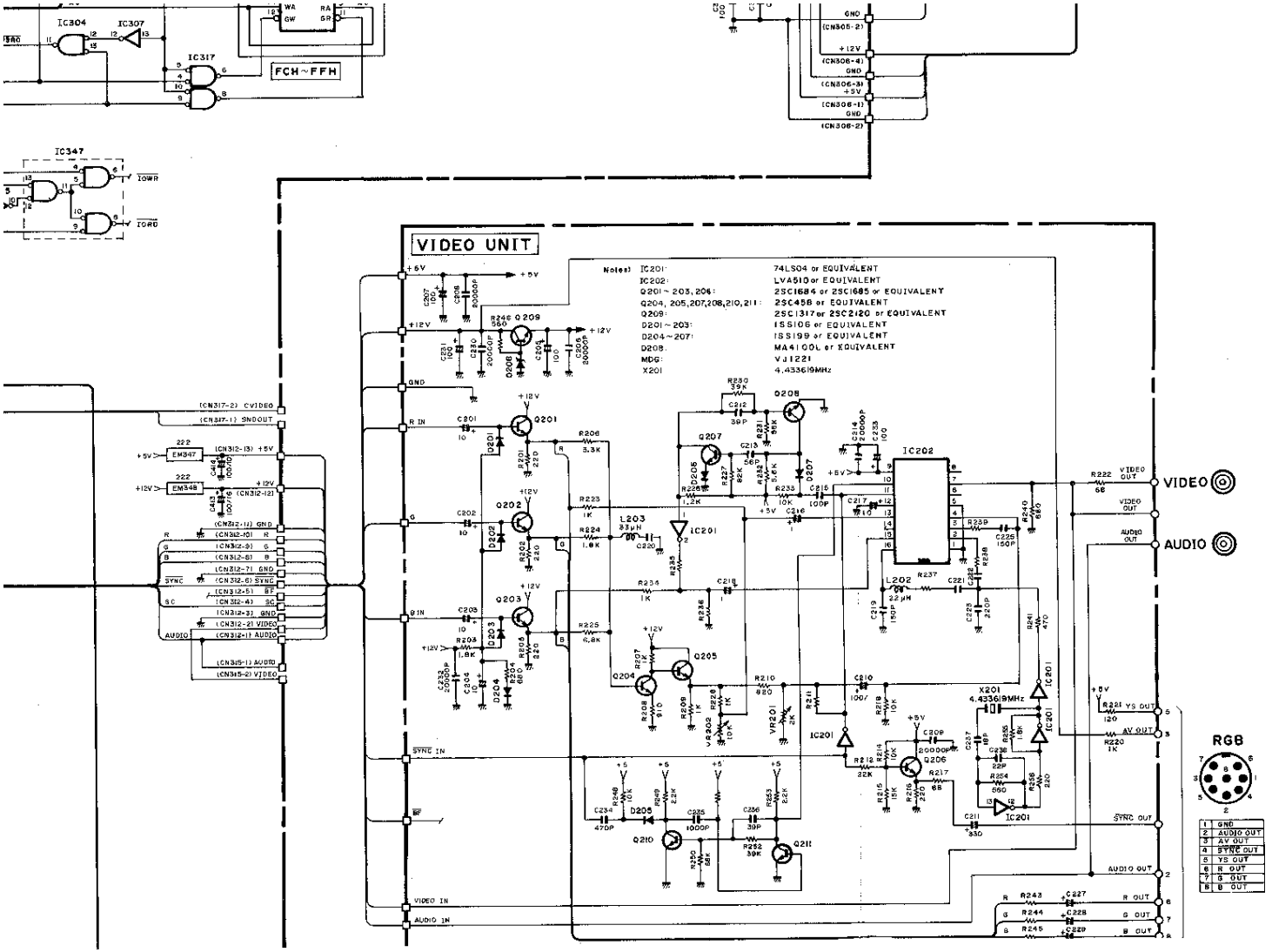

VIDEO UNIT
Notes) IC201: 74LS04 or EQUIVALENT
IC202: LVA510 or EQUIVALENT
Q201~203, 206: 2SC1684 or 2SC1685 or EQUIVALENT
Q204, 205, 207, 208, 210, 211: 2SC458 or EQUIVALENT
Q209: 2SC1317 or 2SC2120 or EQUIVALENT
D201~203: 1SS106 or EQUIVALENT
D204~207: 1SS199 or EQUIVALENT
D208: MA4100L or EQUIVALENT
MDG: VJ1221
X201 4.433619MHz
FCH~FFH
IC304
IC307
IC317
IC347
IOWR
IORD
VIDEO
AUDIO
RGB
1 GND
2 AUDIO OUT
3 AV OUT
4 SYNC OUT
5 YS OUT
6 R OUT
7 G OUT
8 B OUT